Quick Start

Thank you for purchasing the MSI® **MPG X570 GAMING EDGE WIFI** motherboard. This Quick Start section provides demonstration diagrams about how to install your computer. Some of the installations also provide video demonstrations. Please link to the URL to watch it with the web browser on your phone or tablet. You may have even link to the URL by scanning the QR code.

Preparing Tools and Components

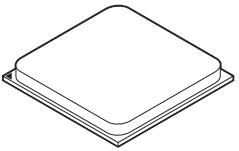

AMD® AM4 CPU

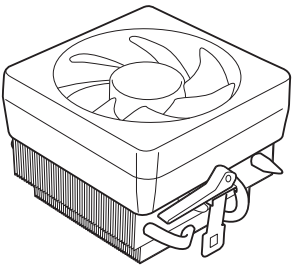

CPU Fan

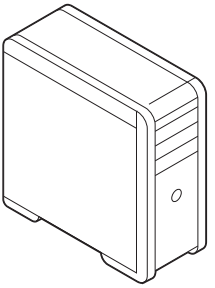

Chassis

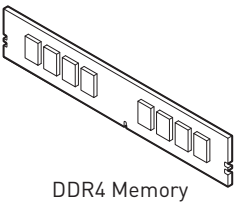

DDR4 Memory

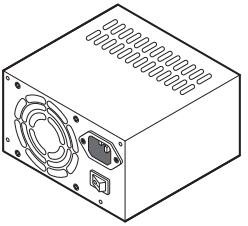

Power Supply Unit

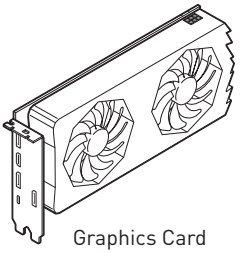

Graphics Card

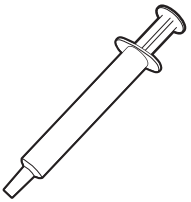

Thermal Paste

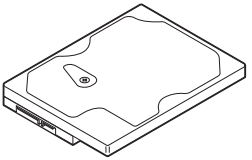

SATA Hard Disk Drive

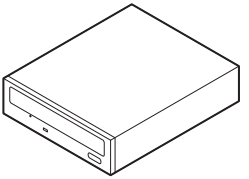

SATA DVD Drive

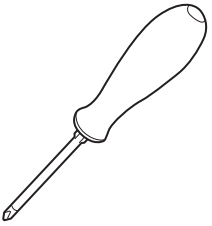

Phillips Screwdriver



A Package of Screws

Safety Information

• The components included in this package are prone to damage from electrostatic discharge (ESD). Please adhere to the following instructions to ensure successful computer assembly.

• Ensure that all components are securely connected. Loose connections may cause the computer to not recognize a component or fail to start.

• Hold the motherboard by the edges to avoid touching sensitive components.

• It is recommended to wear an electrostatic discharge (ESD) wrist strap when handling the motherboard to prevent electrostatic damage. If an ESD wrist strap is not available, discharge yourself of static electricity by touching another metal object before handling the motherboard.

• Store the motherboard in an electrostatic shielding container or on an anti-static pad whenever the motherboard is not installed.

• Before turning on the computer, ensure that there are no loose screws or metal components on the motherboard or anywhere within the computer case.

• Do not boot the computer before installation is completed. This could cause permanent damage to the components as well as injury to the user.

• If you need help during any installation step, please consult a certified computer technician.

• Always turn off the power supply and unplug the power cord from the power outlet before installing or removing any computer component.

• Keep this user guide for future reference.

• Keep this motherboard away from humidity.

• Make sure that your electrical outlet provides the same voltage as is indicated on the PSU, before connecting the PSU to the electrical outlet.

• Place the power cord such a way that people can not step on it. Do not place anything over the power cord.

• All cautions and warnings on the motherboard should be noted.

• If any of the following situations arises, get the motherboard checked by service personnel:

  ▪ Liquid has penetrated into the computer.

  ▪ The motherboard has been exposed to moisture.

  ▪ The motherboard does not work well or you can not get it work according to user guide.

  ▪ The motherboard has been dropped and damaged.

  ▪ The motherboard has obvious sign of breakage.

• Do not leave this motherboard in an environment above 60°C (140°F), it may damage the motherboard.

Installing a Processor

https://youtu.be/Xv89nhFk1vc

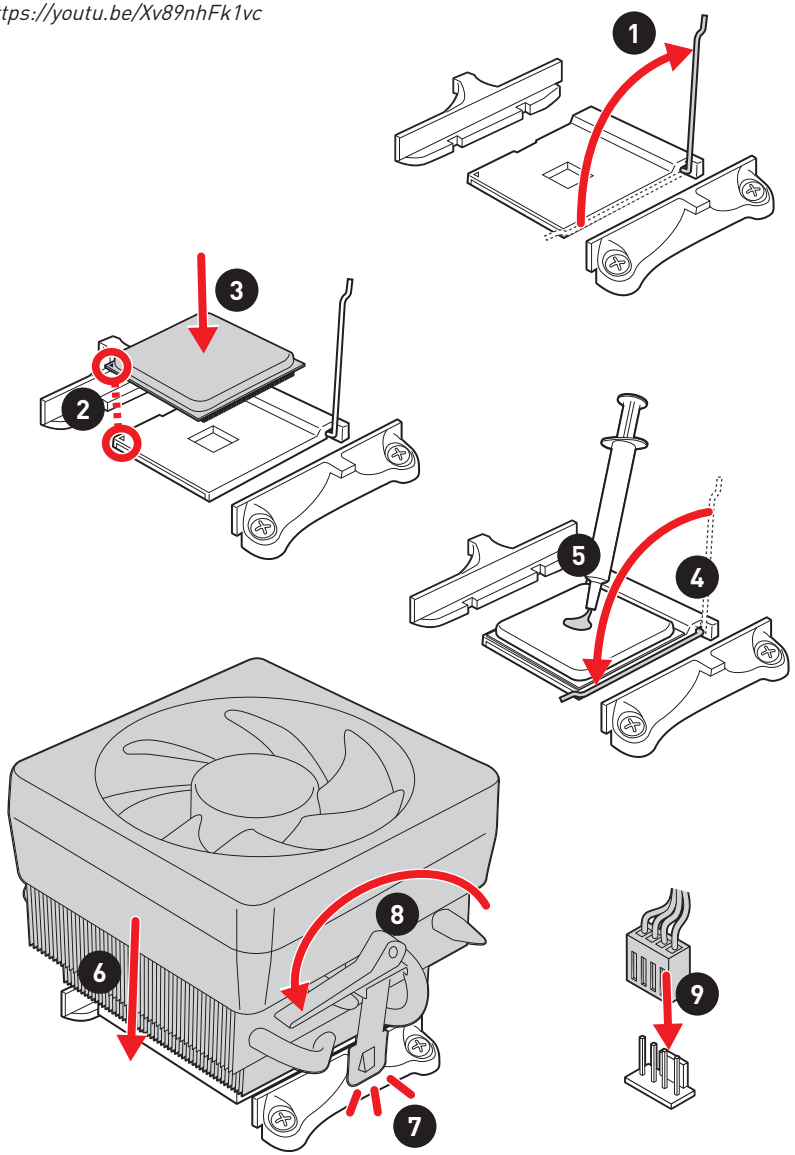

Important

If you are installing the screw-type CPU heatsink, please follow the figure below to remove the retention module first and then install the heatsink.

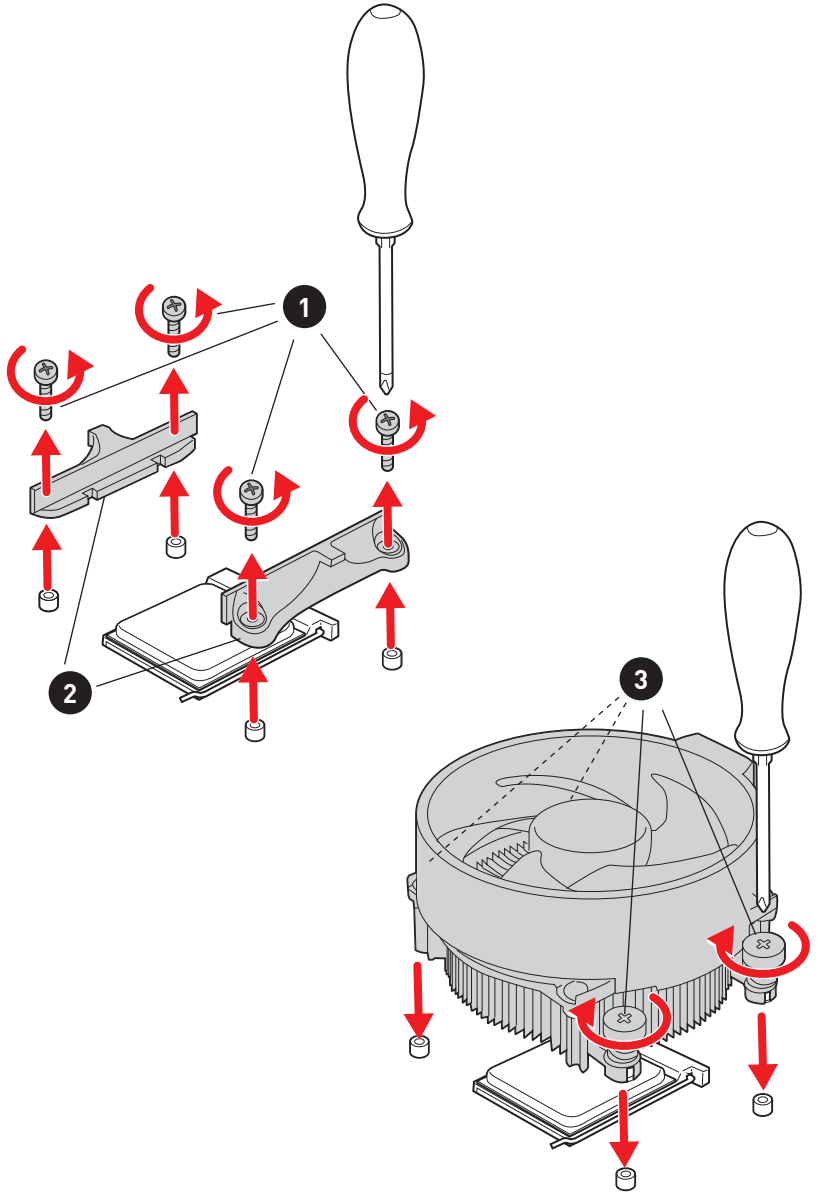

Installing DDR4 memory

http://youtu.be/T03aDrJPyQs

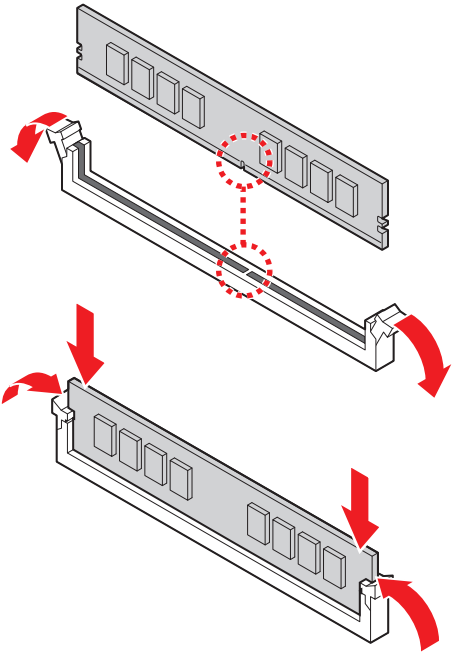

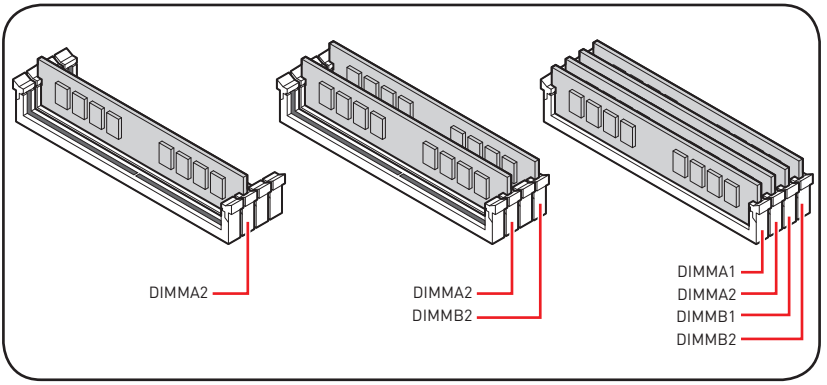

Connecting the Front Panel Header

http://youtu.be/DPELIdVNZUI

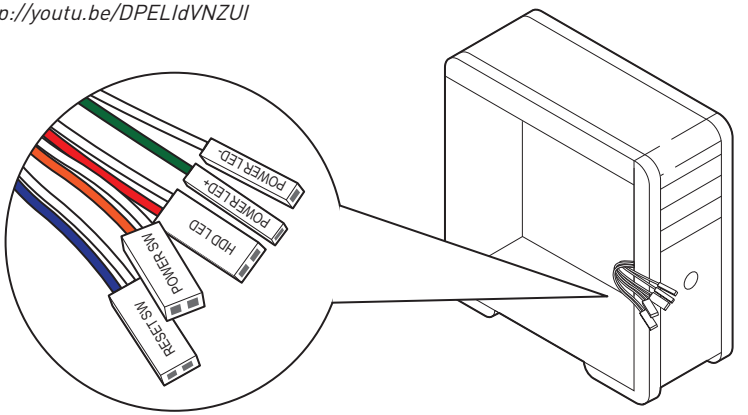

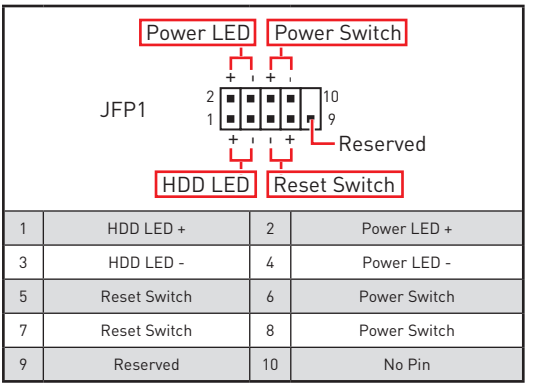

1	HDD LED +	2	Power LED +
3	HDD LED -	4	Power LED -
5	Reset Switch	6	Power Switch
7	Reset Switch	8	Power Switch
9	Reserved	10	No Pin

Installing the Motherboard

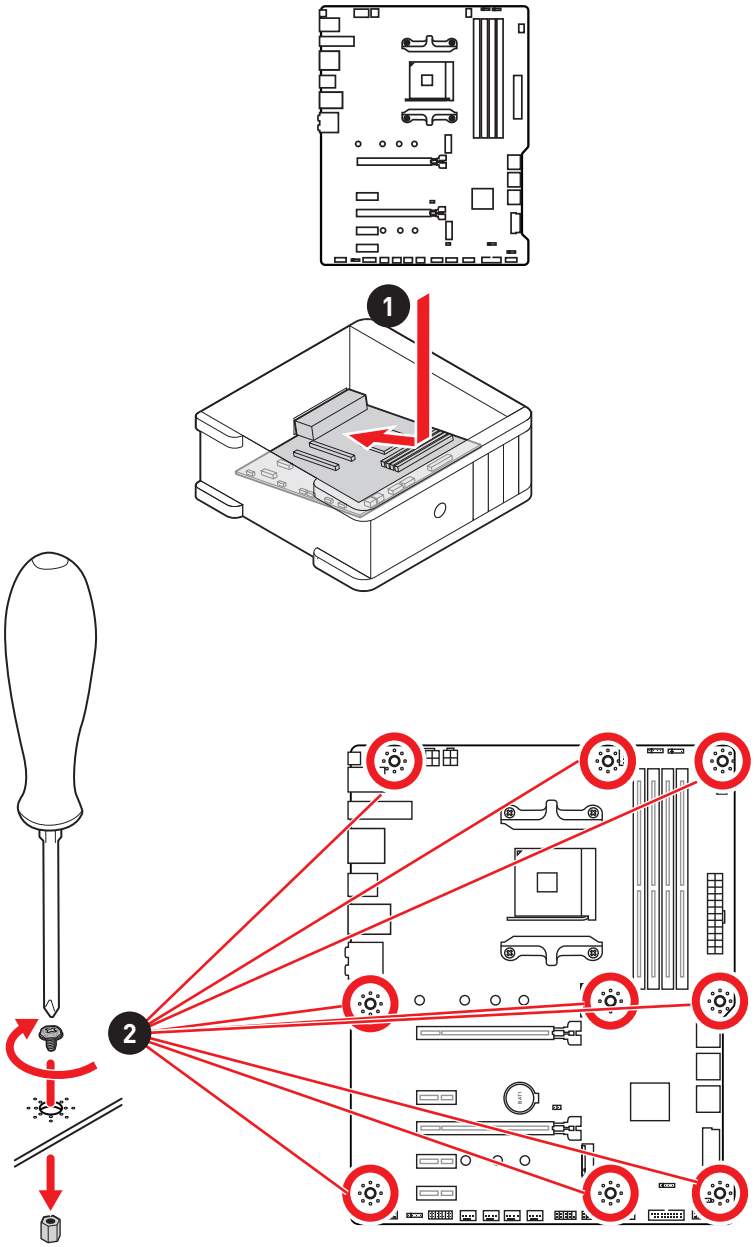

Connecting the Power Connectors

http://youtu.be/gkDYyR_83I4

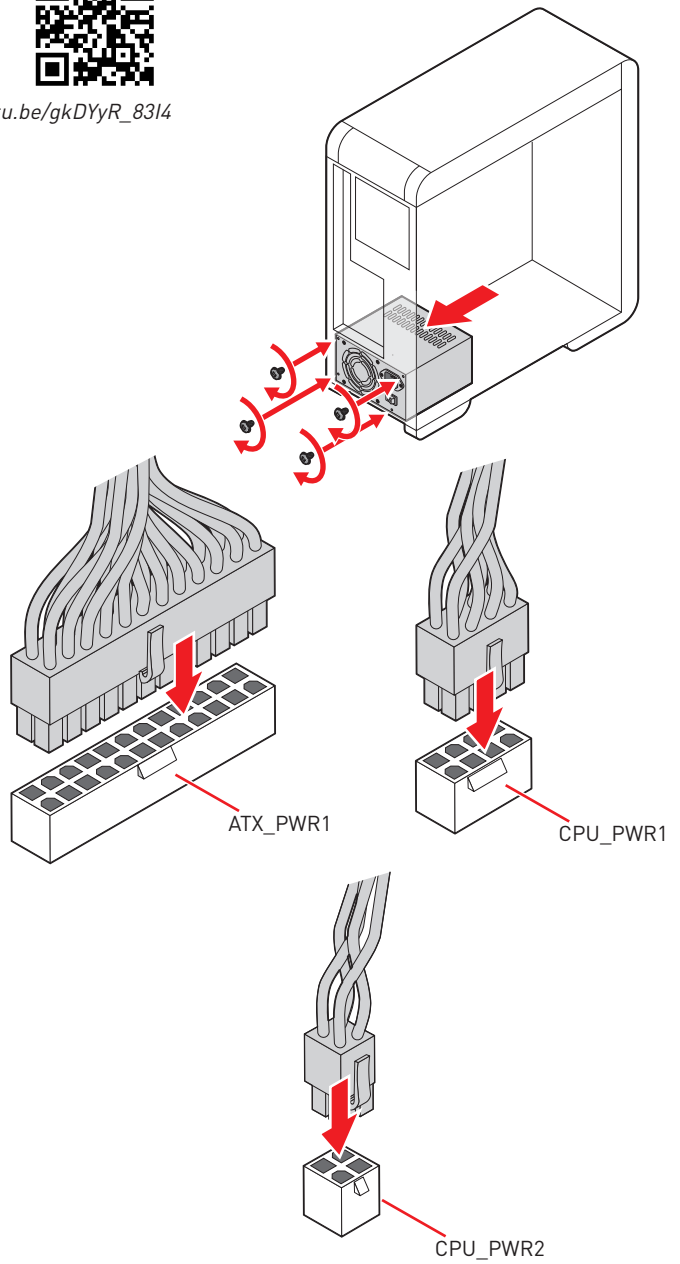

Installing SATA Drives

http://youtu.be/RZsMpqxythc

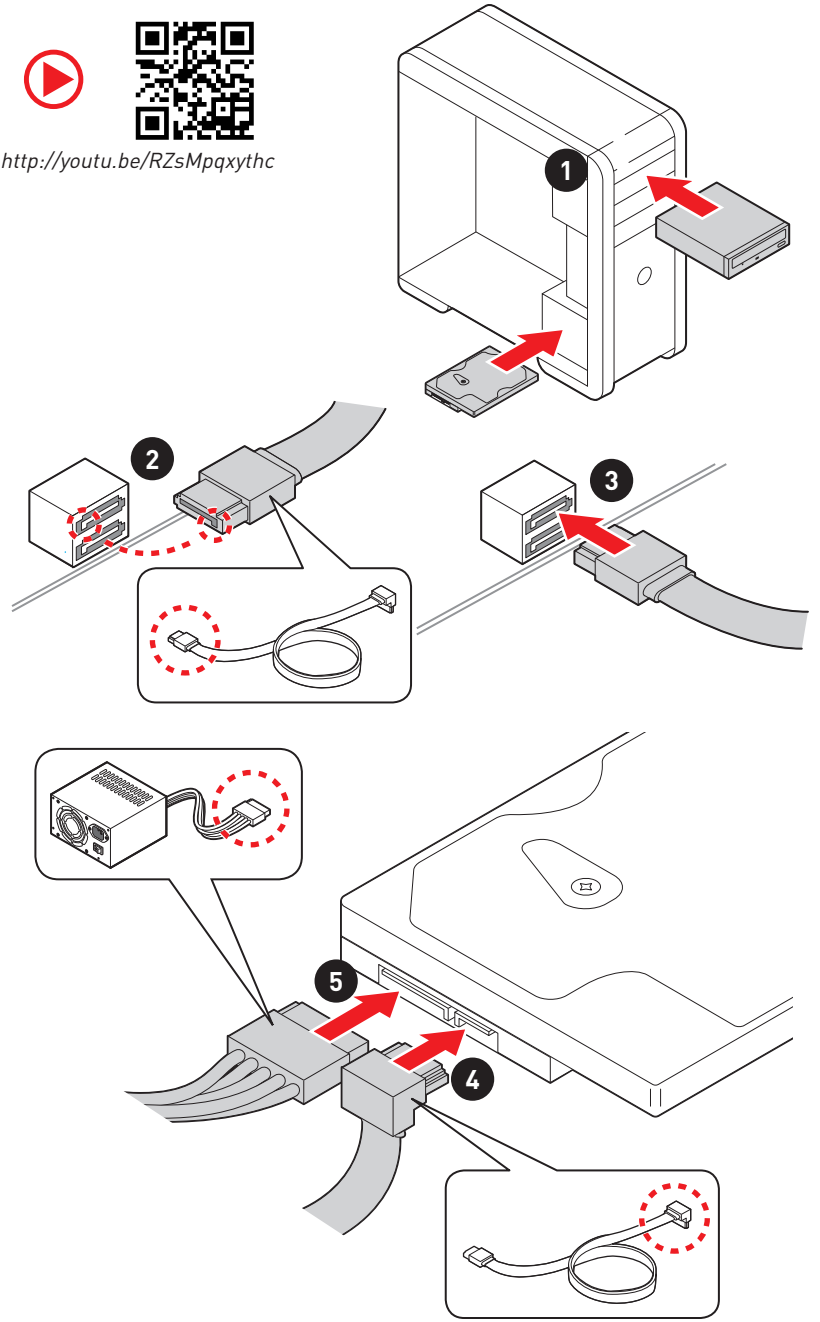

Installing a Graphics Card

http://youtu.be/mG0GZpr9w_A

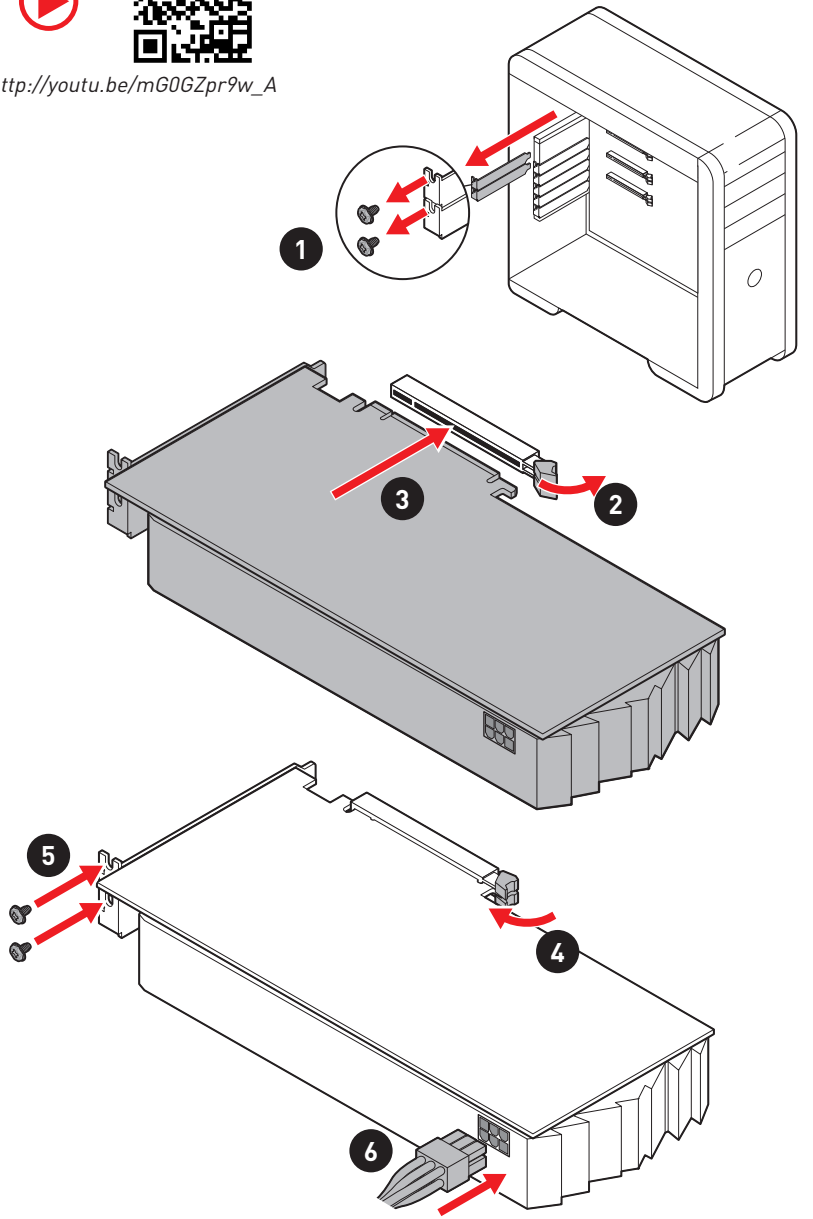

Connecting Peripheral Devices

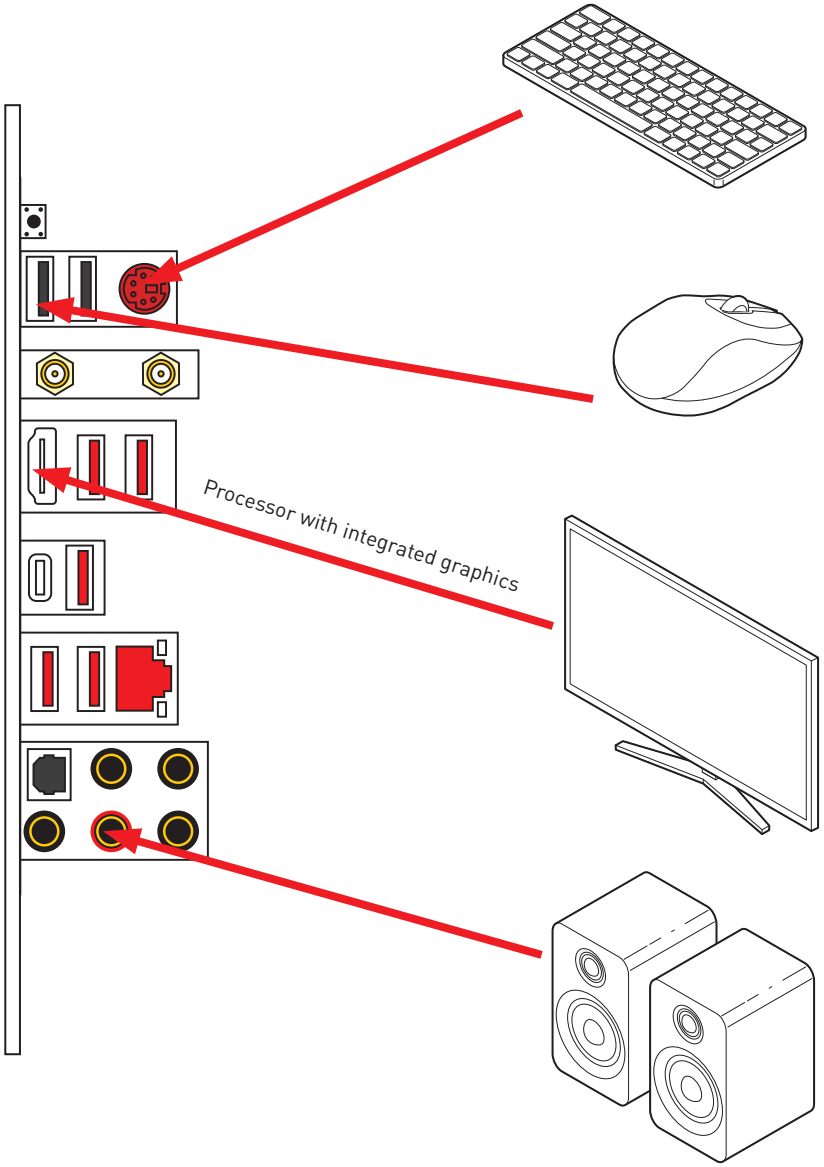

Power On

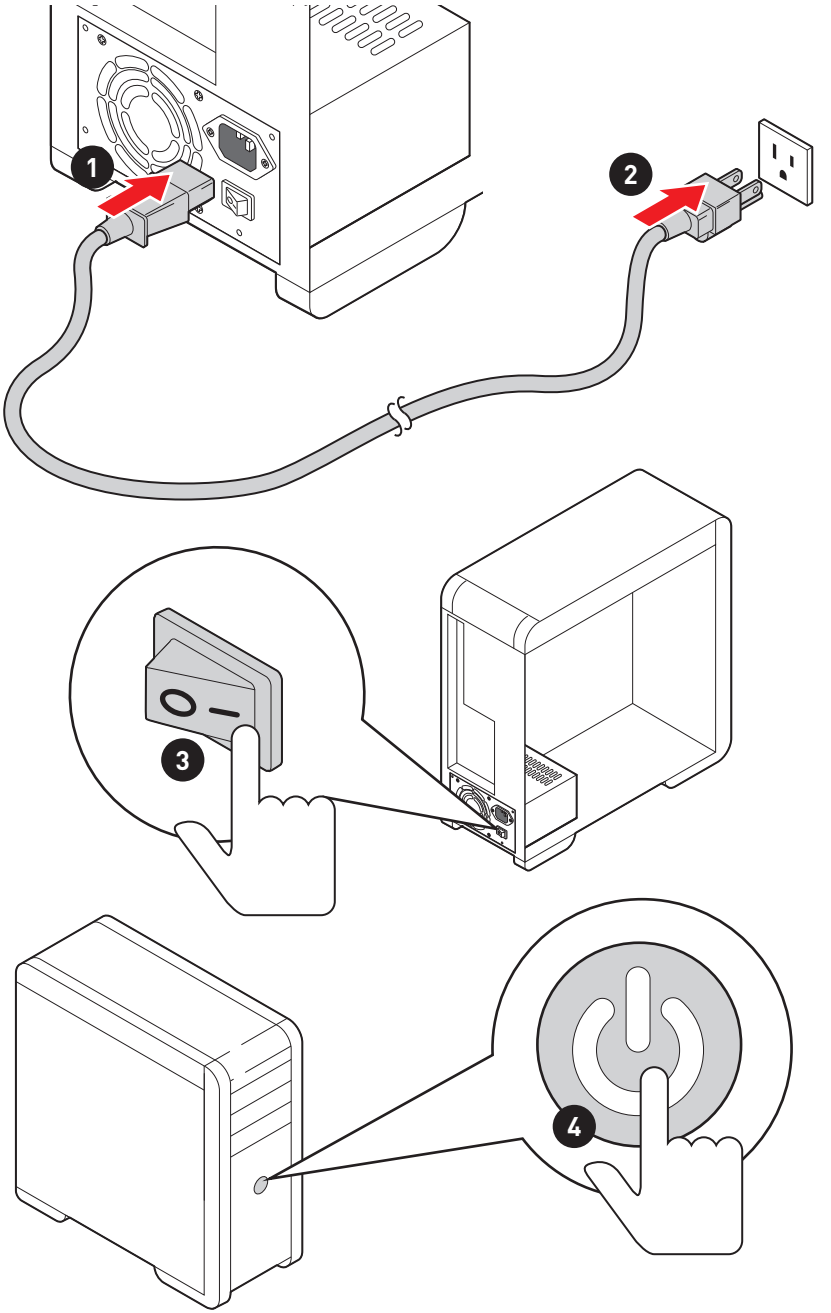

Contents

Quick Start **1**
Preparing Tools and Components 1
Safety Information 2
Installing a Processor 3
Installing DDR4 memory 5
Connecting the Front Panel Header 6
Installing the Motherboard 7
Connecting the Power Connectors 8
Installing SATA Drives 9
Installing a Graphics Card 10
Connecting Peripheral Devices 11
Power On 12
Specifications **15**
Package contents **20**
Block Diagram **21**
Rear I/O Panel **22**
LAN Port LED Status Table 22
Audio Ports Configuration 22
Realtek Audio Console 23
Overview of Components **26**
CPU Socket 28
DIMM Slots 29
PCI_E1~5: PCIe Expansion Slots 30
M2_1~2: M.2 Slots (Key M) 31
SATA1~6: SATA 6Gb/s Connectors 33
JFP1, JFP2: Front Panel Connectors 33
CPU_PWR1~2, ATX_PWR1: Power Connectors 34
CPU_FAN1, PUMP_FAN1, SYS_FAN1~4: Fan Connectors 35
JUSB3~4: USB 3.2 Gen1 Connectors 36
JUSB1~2: USB 2.0 Connectors 36
JAUD1: Front Audio Connector 37
JCOM1: Serial Port Connector 37
JCI1: Chassis Intrusion Connector 38
JBAT1: Clear CMOS (Reset BIOS) Jumper 39
EZ Debug LED 39

JRGB1~2: RGB LED connectors 40
JRAINBOW1~2: Addressable RGB LED connectors 41
Installing OS, Drivers & Utilities 42
Installing Windows® 10 42
Installing Drivers 42
Installing Utilities 42
BIOS Setup 43
Entering BIOS Setup 43
Resetting BIOS 44
Updating BIOS 44
EZ Mode 46
Advanced Mode 48
SETTINGS 49
Advanced 49
Boot 54
Security 55
Save & Exit 56
OC 57
M-FLASH 61
OC PROFILE 62
HARDWARE MONITOR 63
A-XMP Operation 64
Nahimic 3 65
Installation and Update 65
Audio Tab 65
Microphone Tab 66
Sound Tracker Tab 67
Settings Tab 67
AMD RAID Configuration 68
Enabling RAIDXpert2 Configuration Utility 68
Initializing Disks 69
Creating Arrays 70
Deleting Arrays 71
Installing RAID Driver 72
Troubleshooting 73
Regulatory Notices 74

Specifications

CPU	Supports 2nd and 3rd Gen AMD Ryzen™ / Ryzen™ with Radeon™ Vega Graphics and 2nd Gen AMD Ryzen™ with Radeon™ Graphics Desktop Processors for Socket AM4
Chipset	AMD® X570 Chipset
Memory	• 4x DDR4 memory slots, support up to 128GB* (depending on the processor) ▪ Supports DDR4 1866/ 2133/ 2400/ 2666 MHz by JEDEC, and 2666/ 2800/ 2933/ 3000/ 3066/ 3200/ 3466/ 3600/ 3733/ 3866/ 4000/ 4133/ 4266/ 4400 MHz by A-XMP OC MODE • Dual channel memory architecture • Supports non-ECC UDIMM memory • Supports ECC UDIMM memory (non-ECC mode) • Supports un-buffered memory * Please refer www.msi.com for more information on compatible memory.
Expansion Slot	• 1x PCIe 4.0/ 3.0 x16 slot (PCI_E1) ▪ 3rd Gen AMD Ryzen™ support PCIe 4.0 x16 mode ▪ 2nd Gen AMD Ryzen™ support PCIe 3.0 x16 mode ▪ Ryzen™ with Radeon™ Vega Graphics and 2nd Gen AMD Ryzen™ with Radeon™ Graphics support PCIe 3.0 x8 mode • 1x PCIe 4.0/ 3.0 x16 slot (PCI_E3, supports x4 mode) • 3x PCIe 3.0 x1 slots* * PCI_E2 will be unavailable when installing the PCIe card in PCI_E4 slot. ** The speeds may vary for different devices
Onboard Graphics	• 1x HDMI™ 1.4 port, supports a maximum resolution of 4096x2160 @24Hz* * Only support when using Ryzen™ with Radeon™ Vega Graphics and 2nd Gen AMD Ryzen™ with Radeon™ Graphics Processors * Maximum shared memory of 2048 MB
Multi-GPU	• Supports 2-Way AMD® CrossFire™ Technology
LAN	• 1x Realtek® 8111H Gigabit LAN Controller

Continued on next page

Continued from previous page

Wireless LAN & Bluetooth®	Intel® Dual Band Wireless-AC 3168 ▪ Supports 802.11 a/b/g/n/ac, dual band (2.4GHz, 5GHz) up to 433 Mbps ▪ Supports Dual Mode Bluetooth® 2.1, 2.1+EDR, 3.0, 4.0, BLE, 4.2 ▪ The Wireless module is pre-install in the M2_3 (Key-E) slot
Storage	• 6x SATA 6Gb/s ports ▪ SATA3~SATA6 ports (from AMD® X570 Chipset) ▪ SATA1~SATA2 ports (from ASMedia ASM1061) • 2x M.2 slots (Key M)* ▪ M2_1 slot (from AMD® Processor) ‣ Supports PCIe 4.0 x4 (3rd Gen AMD Ryzen™) ‣ Supports PCIe 3.0 x4 (2nd Gen AMD Ryzen™/ Ryzen™ with Radeon™ Vega Graphics and 2nd Gen AMD Ryzen™ with Radeon™ Graphics) ‣ Supports 2242/ 2260/ 2280/ 22110 storage devices ▪ M2_2 slot (from AMD® X570 Chipset) ‣ Supports PCIe 3.0 x4 and SATA 6Gb/s ‣ Supports 2242/ 2260/ 2280 storage devices
RAID	• Supports RAID 0, RAID 1 and RAID 10 for X570 chipset SATA storage devices • Support RAID 0, RAID 1 and RAID 10 for M.2 NVME storage devices
Audio	Realtek® ALC1220 Codec • 7.1-Channel High Definition Audio • Supports Optical S/PDIF output

Continued on next page

Continued from previous page

USB	• AMD® X570 Chipset ▪ 2x USB 3.2 Gen 2 (SuperSpeed USB 10Gbps) Type-A ports on the back panel ▪ 4x USB 3.2 Gen 1 (SuperSpeed USB) ports through the internal USB 3.2 Gen1 connector ▪ 6x USB 2.0 (High-speed USB) ports (2 Type-A ports on the back panel, 4 ports available through the internal USB 2.0 connectors) • AMD® Processor ▪ 2x USB 3.2 Gen2 (3rd Gen AMD Ryzen™) or USB 3.2 Gen1 (2nd Gen AMD Ryzen™/ Ryzen™ with Radeon™ Vega Graphics and 2nd Gen AMD Ryzen™ with Radeon™ Graphics) ports (1x Type-A & 1x Type-C) on the back panel ▪ 2x USB 3.2 Gen1 (SuperSpeed USB) Type-A ports on the back panel
Internal Connectors	• 1x 24-pin ATX main power connector • 1x 8-pin ATX 12V power connector • 1x 4-pin ATX 12V power connector • 6x SATA 6Gb/s connectors • 2x USB 2.0 connectors (supports additional 4 USB 2.0 ports) • 2x USB 3.2 Gen1 connectors (supports additional 4 USB 3.2 Gen1 ports) • 1x 4-pin CPU fan connector • 1x 4-pin water-pump connector • 4x 4-pin system fan connectors • 1x Front panel audio connector • 2x System panel connectors • 1x TPM module connector • 1x Serial port connector • 1x Clear CMOS jumper • 1x Chassis Intrusion connector • 2x 4-pin RGB LED connectors • 2x 3-pin RAINBOW LED connectors • 4x EZ Debug LEDs

Continued on next page

Continued from previous page

Back Panel Connectors	• 1x Flash BIOS Button • 1x PS/2 keyboard/ mouse combo port • 2x USB 2.0 ports • 2x WiFi/ Bluetooth antenna jacks • 2x USB 3.2 Gen 1 ports • 1x HDMI™ port • 1x USB 3.2 Gen 2/ 1 Type A port • 1x USB 3.2 Gen 2/1 Type C port • 2x USB 3.2 Gen 2 Type A ports • 1x LAN(RJ45) port • 5x OFC audio jacks • 1x Optical S/PDIF Out connector
I/O Controller	NUVOTON NCT6797 Controller Chip
Hardware Monitor	• CPU/ System/ Chipset temperature detection • CPU/ System/ Chipset fan speed detection • CPU/ System/ Chipset fan speed control
Form Factor	• ATX Form Factor • 12 in. x 9.6 in. (30.4 cm x 24.3 cm)
BIOS Features	• 1x 256 Mb flash • UEFI AMI BIOS • ACPI 6.1, SM BIOS 2.8 • Multi-language
Software	• Drivers • DRAGON CENTER • Nahimic Audio • CPU-Z MSI GAMING • MSI App Player (BlueStacks) • Google Chrome™ ,Google Toolbar, Google Drive • Norton™ Internet Security Solution

Continued on next page

Continued from previous page

Dragon Center Features	• DRAGON OPTIMIZATION • OC Performance • Hardware Monitor • True Color • Mystic Light • Live Update Please refer to http://download.msi.com/manual/mb/DRAGONCENTER2.pdf for more details.
Special Features	• Audio ▪ Nahimic 3 ▪ Audio Boost 4 • Network ▪ Intel WiFi • Storage ▪ Lightning Gen 4 M.2 ▪ Turbo M.2 • Fan ▪ Pump Fan ▪ GAMING Fan Control ▪ FROZR Heatsink Design • LED ▪ Mystic Light 3 ▪ Mystic Light Extension (RGB) ▪ Mystic Light Extension (RAINBOW) ▪ Mystic Light Sync ▪ EZ DEBUG LED • Protection ▪ PCIe Steel Armor ▪ M.2 Shield FROZR ▪ Pre-installed IO shielding

Continued on next page

Continued from previous page

Special Features	• Performance ▪ Multi GPU-CrossFire Technology ▪ DDR4 Boost ▪ Core Boost ▪ GAME Boost ▪ USB with type A+C ▪ AMD Turbo USB 3.2 Gen 2 • BIOS ▪ Click BIOS 5 ▪ Flash BIOS • Certification ▪ GAMING Certified

Package contents

Please check the contents of your motherboard package. It should contain:

Motherboard	MPG X570 GAMING EDGE WIFI	
Cable	SATA 6Gb/s Cables	2
	RAINBOW RGB LED Extension Cable 80cm	1
Accessories	Antenna Set	1
	8.5H M.2 screws	2
	Case Badge	1
	SATA Cable Labels	1
	Product Registration Card	1
Application DVD	Driver DVD	1
Documentation	User Manual	1
	Quick Installation Guide	1

Important

If any of the above items are damaged or missing, please contact your retailer.

Block Diagram

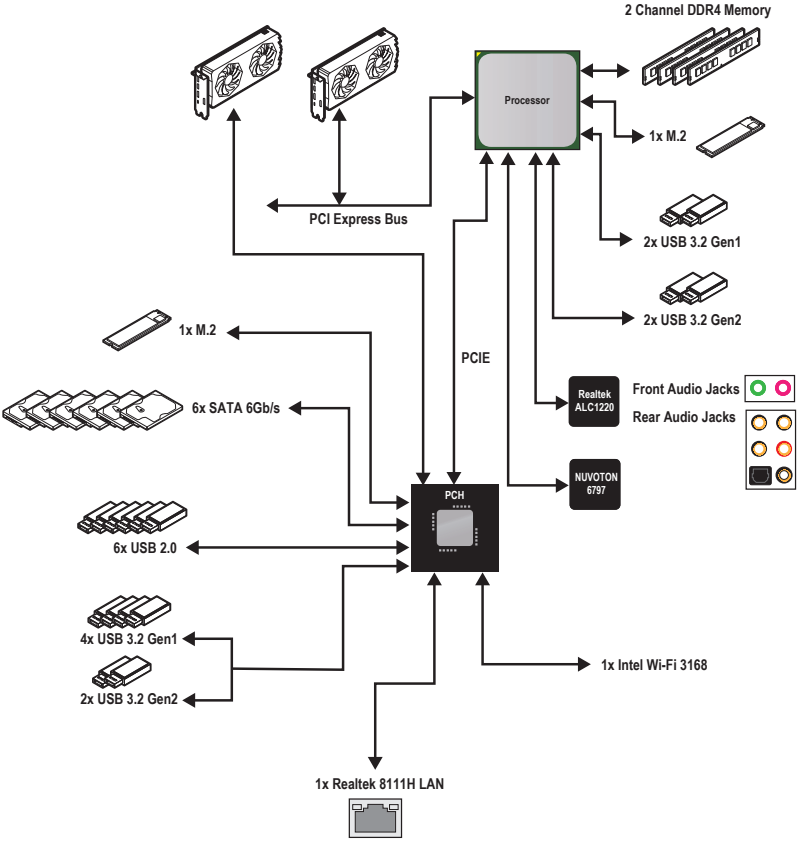

Rear I/O Panel

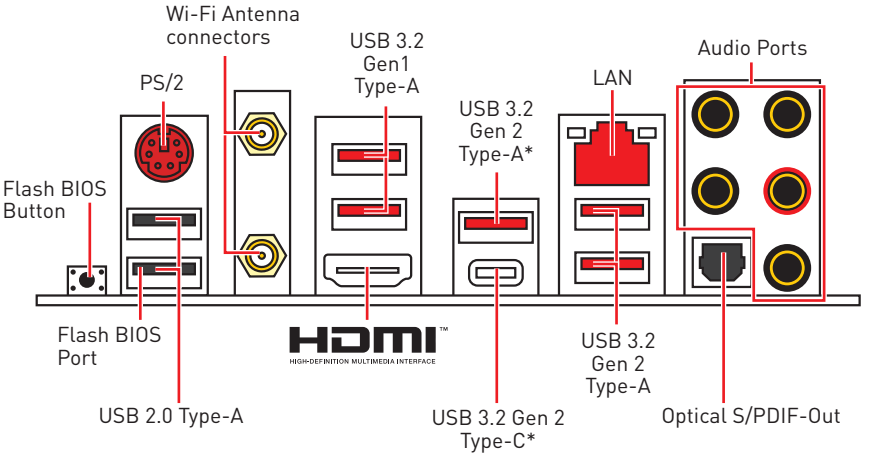

**USB 3.2 Gen2 (3rd Gen AMD Ryzen™) or USB 3.2 Gen1 (2nd Gen AMD Ryzen™/Ryzen™ with Radeon™ Vega Graphics and 2nd Gen AMD Ryzen™ with Radeon™Graphics)*

• **Flash BIOS Port/ Button** - Please refer to page 45 for Updating BIOS with Flash BIOS Button.

LAN Port LED Status Table

Link/ Activity LED	
Status	**Description**
Off	No link
Yellow	Linked
Blinking	Data activity

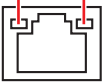

Speed LED	
Status	**Description**
Off	10 Mbps connection
Green	100 Mbps connection
Orange	1 Gbps connection

Audio Ports Configuration

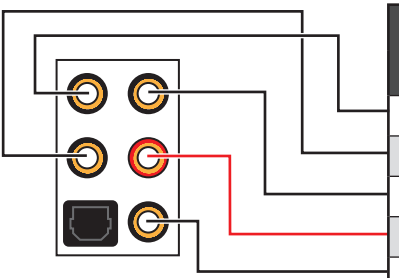

Audio Ports	Channel			
	2	4	6	8
Center/ Subwoofer Out			●	●
Rear Speaker Out		●	●	●
Line-In/ Side Speaker Out				●
Line-Out/ Front Speaker Out	●	●	●	●
Mic In				

(●: connected, **Blank**: empty)

Realtek Audio Console

After Realtek Audio Console is installed. You can use it to change sound settings to get better sound experience.

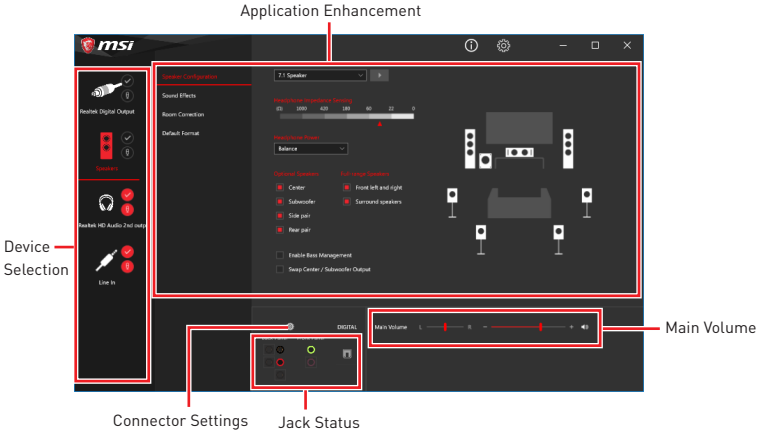

• **Device Selection** - allows you to select a audio output source to change the related options. The **check** sign indicates the devices as default.

• **Application Enhancement** - the array of options will provide you a complete guidance of anticipated sound effect for both output and input device.

• **Main Volume** - controls the volume or balance the right/left side of the speakers that you plugged in front or rear panel by adjust the bar.

• **Jack Status** - depicts all render and capture devices currently connected with your computer.

• **Connector Settings** - configures the connection settings.

Auto popup dialog

When you plug into a device at an audio jack, a dialogue window will pop up asking you which device is current connected.

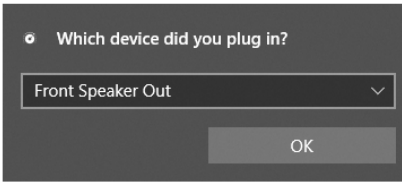

Each jack corresponds to its default setting as shown on the next page.

Important

The pictures above for reference only and may vary from the product you purchased.

Audio jacks to headphone and microphone diagram

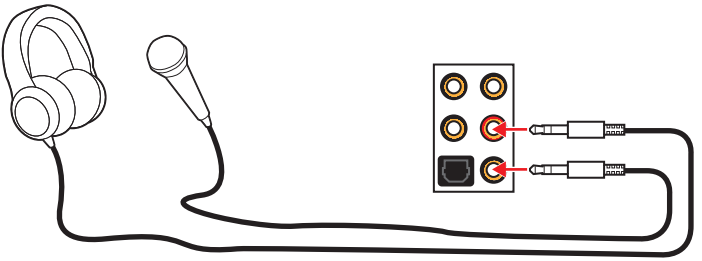

Audio jacks to stereo speakers diagram

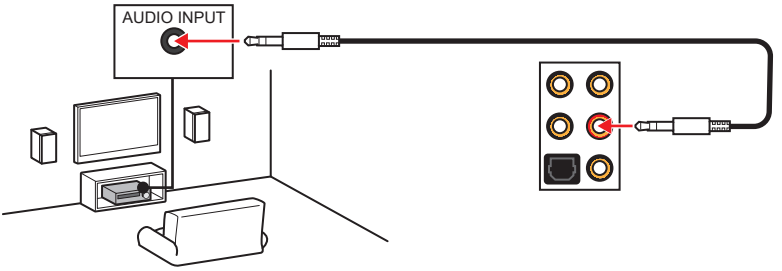

Audio jacks to 7.1-channel speakers diagram

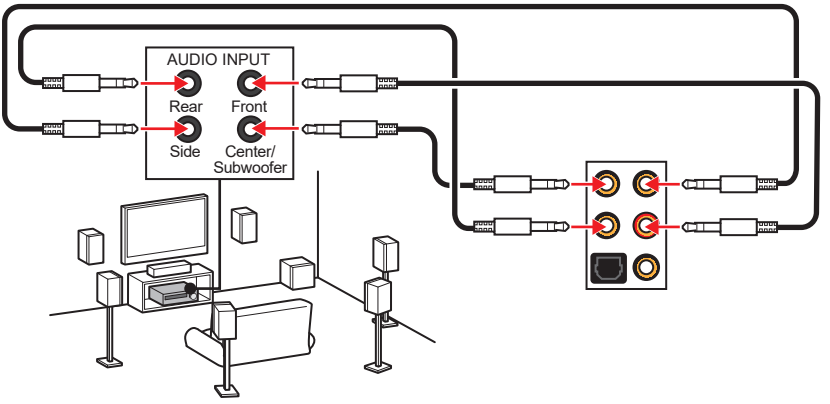

Installing antennas

1. Screw the antennas tight to the antenna connectors as shown below.
2. Orient the antennas.

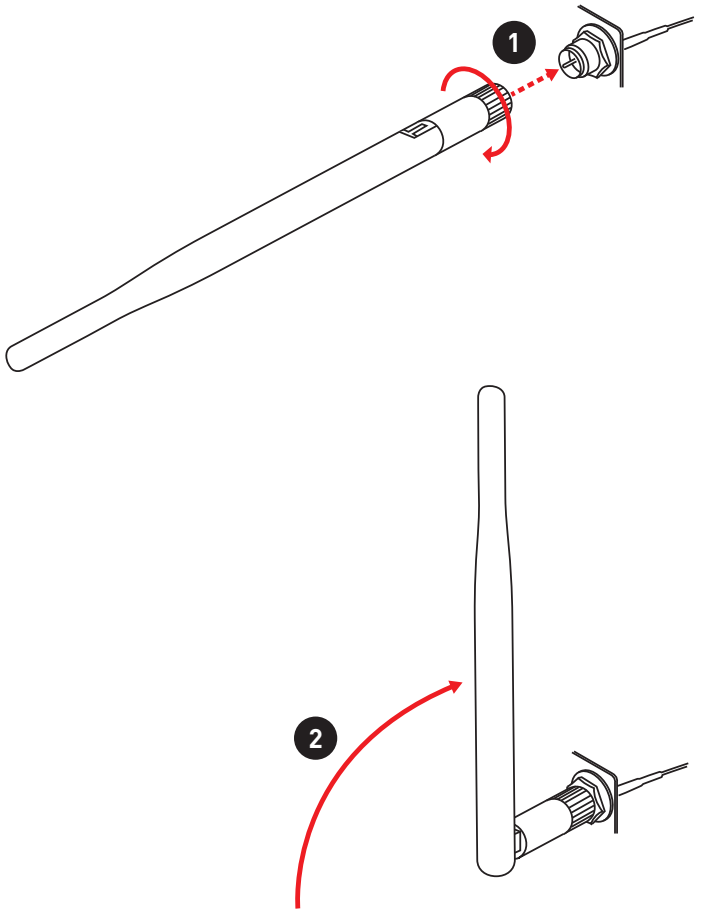

Overview of Components

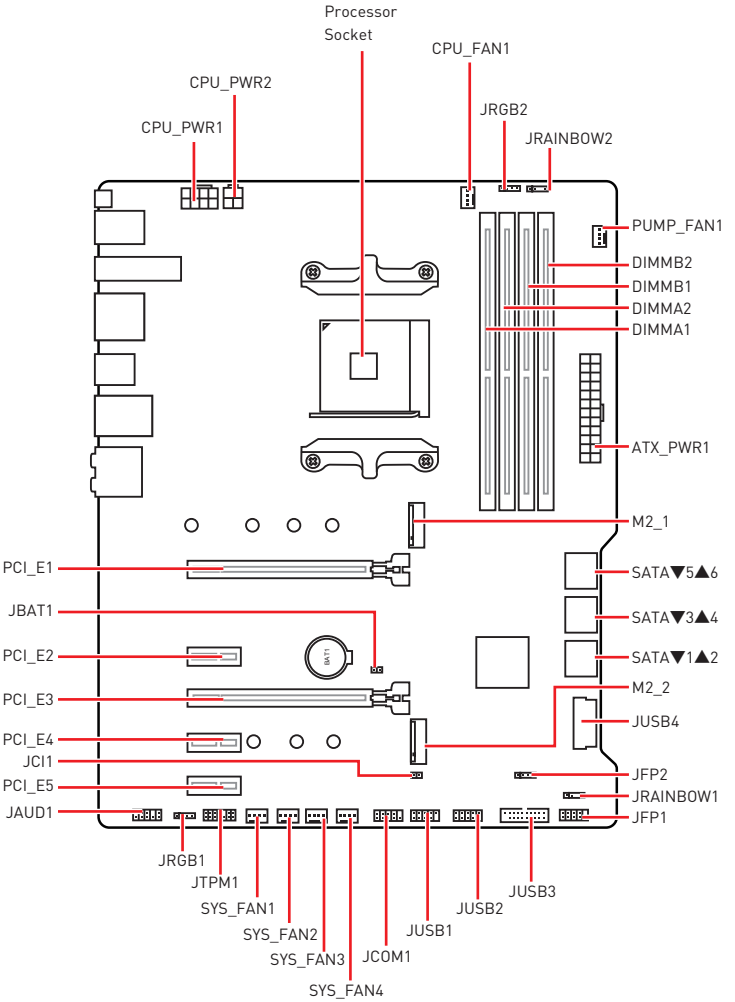

Component Contents

Port Name	Port Type	Page
CPU_FAN1, PUMP_FAN1, SYS_FAN1~4	Fan Connectors	35
CPU_PWR1~2, ATX_PWR1	Power Connectors	34
CPU Socket	AM4 CPU Socket	28
DIMMA1/A2/B1/B2	DIMM Slots	29
JAUD1	Front Audio Connector	37
JBAT1	Clear CMOS (Reset BIOS) Jumper	39
JCI1	Chassis Intrusion Connector	38
JCOM1	Serial Port Connector	37
JFP1, JFP2	Front Panel Connectors	33
JRAINBOW1~2	Addressable RGB LED connectors	41
JRGB1~2	RGB LED connectors	40
JUSB1~2	USB 2.0 Connectors	36
JUSB3~4	USB 3.2 Gen1 Connectors	36
M2_1~2	M.2 Slots (Key M)	31
PCI_E1~5	PCIe Expansion Slots	30
SATA1~6	SATA 6Gb/s Connectors	33

CPU Socket

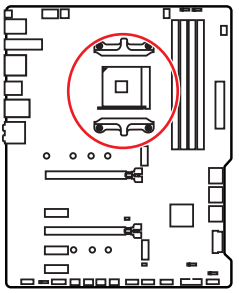

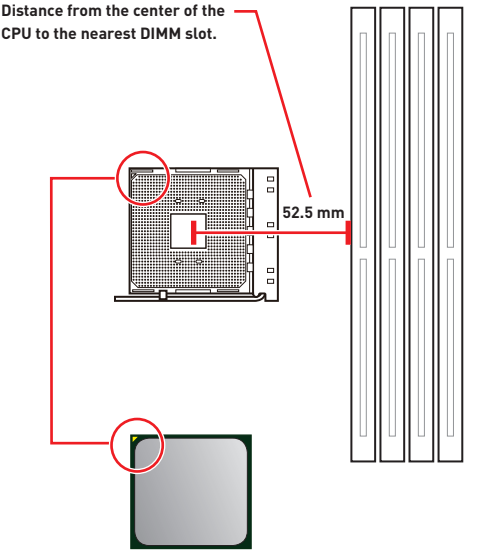

Introduction to the AM4 CPU

The surface of the AM4 CPU has a yellow triangle to assist in correctly lining up the CPU for motherboard placement. The yellow triangle is the Pin 1 indicator.

Important

- *When changing the processor, the system configuration could be cleared and reset BIOS to default values, due to the AM4 processor's architecture.*
- *Always unplug the power cord from the power outlet before installing or removing the CPU.*
- *When installing a CPU, always remember to install a CPU heatsink. A CPU heatsink is necessary to prevent overheating and maintain system stability.*
- *Confirm that the CPU heatsink has formed a tight seal with the CPU before booting your system.*
- *Overheating can seriously damage the CPU and motherboard. Always make sure the cooling fans work properly to protect the CPU from overheating. Be sure to apply an even layer of thermal paste (or thermal tape) between the CPU and the heatsink to enhance heat dissipation.*
- *If you purchased a separate CPU and heatsink/ cooler, Please refer to the documentation in the heatsink/ cooler package for more details about installation.*
- *This motherboard is designed to support overclocking. Before attempting to overclock, please make sure that all other system components can tolerate overclocking. Any attempt to operate beyond product specifications is not recommended. MSI® does not guarantee the damages or risks caused by inadequate operation beyond product specifications.*

DIMM Slots

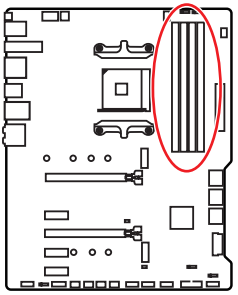

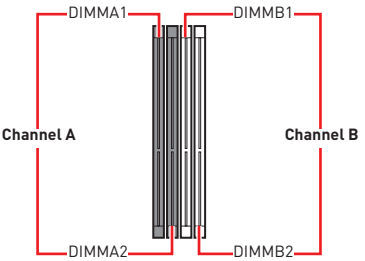

Memory module installation recommendation

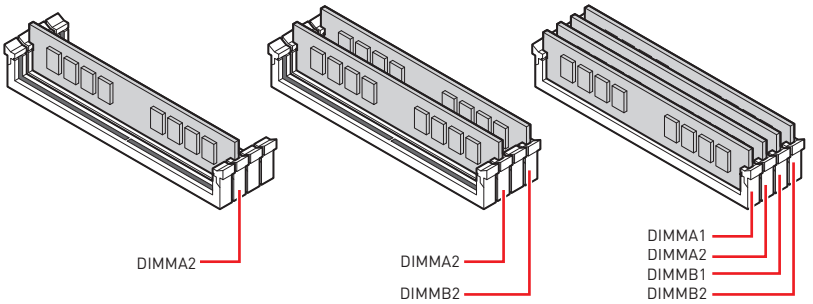

Important

- *Always insert memory modules in the **DIMMA2** slot first.*
- *Due to chipset resource usage, the available capacity of memory will be a little less than the amount of installed.*
- *Based on CPU specification, the Memory DIMM voltage below 1.35V is suggested to protect the CPU.*
- *Please note that the maximum capacity of addressable memory is 4GB or less for 32-bit Windows OS due to the memory address limitation. Therefore, we recommended that you to install 64-bit Windows OS if you want to install more than 4GB memory on the motherboard.*
- *Some memory may operate at a lower frequency than the marked value when overclocking due to the memory frequency operates dependent on its Serial Presence Detect (SPD). Go to BIOS and find the **DRAM Frequency** to set the memory frequency if you want to operate the memory at the marked or at a higher frequency.*
- *It is recommended to use a more efficient memory cooling system for full DIMMs installation or overclocking.*
- *The stability and compatibility of installed memory module depend on installed CPU and devices when overclocking.*

PCI_E1~5: PCIe Expansion Slots

Slots	3rd Gen AMD Ryzen™	2nd Gen AMD Ryzen™	Ryzen™ with Radeon™ Vega Graphics and 2nd Gen AMD Ryzen™ with Radeon™ Graphics
PCI_E1	PCIe 4.0 x16	PCIe 3.0 x16	PCIe 3.0 x8
PCI_E2	PCIe 3.0 x1	PCIe 3.0 x1	PCIe 3.0 x1
PCI_E3	PCIe 4.0 x4	PCIe 3.0 x4	PCIe 3.0 x4
PCI_E4	PCIe 3.0 x1	PCIe 3.0 x1	PCIe 3.0 x1
PCI_E5	PCIe 3.0 x1	PCIe 3.0 x1	PCIe 3.0 x1

Important

- *If you install a large and heavy graphics card, you need to use a tool such as **MSI Gaming Series Graphics Card Bolster** to support its weight to prevent deformation of the slot.*
- *For a single PCIe x16 expansion card installation with optimum performance, using the **PCI_E1** slot is recommended.*
- *When adding or removing expansion cards, always turn off the power supply and unplug the power supply power cable from the power outlet. Read the expansion card' s documentation to check for any necessary additional hardware or software changes.*

PCIe bandwidth table

Slot	Single		2-Way	
PCI_E1 (CPU)	@4.0 x16* or @3.0 x16** or @3.0 x8***		@4.0 x16* or @3.0 x16** or @3.0 x8***	
PCI_E2 (PCH)	3.0 x1	—	3.0 x1	—
PCI_E3 (PCH)	4.0 x4* or 3.0 x4**/***		@4.0 x4* or @3.0 x4**/***	
PCI_E4 (PCH)	—	3.0 x1	—	3.0 x1
PCI_E5 (PCH)	3.0 x1		3.0 x1	

(—: unavailable, @: graphics card, *: for 3rd Gen AMD Ryzen™, **: for 2nd Gen AMD Ryzen™, ***: for Ryzen™ with Radeon™ Vega Graphics and 2nd Gen AMD Ryzen™ with Radeon™ Graphics)

M2_1~2: M.2 Slots (Key M)

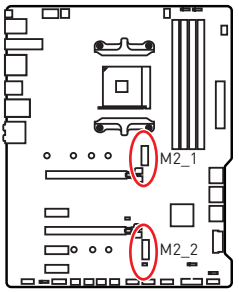

The following table describes the relationship between the M.2 slots and the PCIe bandwidth of the processors.

Slots	3rd Gen AMD Ryzen™	2nd Gen AMD Ryzen™	Ryzen™ with Radeon™ Vega Graphics and 2nd Gen AMD Ryzen™ with Radeon™ Graphics
M2_1 (CPU)	PCIe 4.0 x4	PCIe 3.0 x4	PCIe 3.0 x4
M2_2 (PCH)	PCIe 3.0 x4	PCIe 3.0 x4	PCIe 3.0 x4

M2_1 installaion (including heatsink)

1. Loosen the screws of M.2 SHIELD FROZR.
2. Remove the M.2 SHIELD FROZR and remove the protective films from the thermal pads.

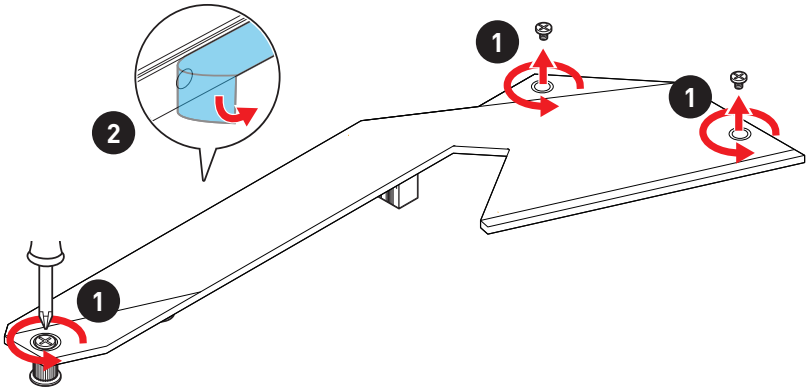

3. For **2242**/ **2260** M.2 SSD, please move and fasten the M.2 standoff to the appropriate position to your M.2 SSD.
   For **2280** M.2 SSD, please skip this step.
   For **22110** M.2 SSD, please remove the M.2 standoff.
4. Insert your M.2 SSD into the M.2 slot at a 30-degree angle.
5. Secure the M.2 SSD in place with the 8.5H M.2 screw provided with motherboard package. This step is for **2242**/ **2260**/ **2280** M.2 SSD only.

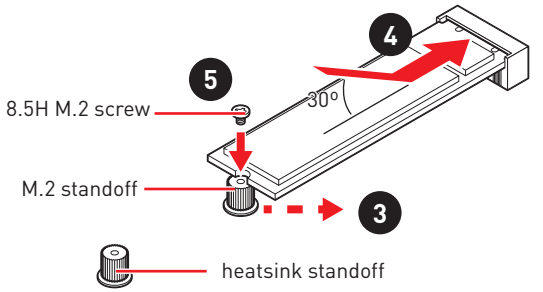

6. Put the M.2 SHIELD FROZR heatsink back in place and secure it.

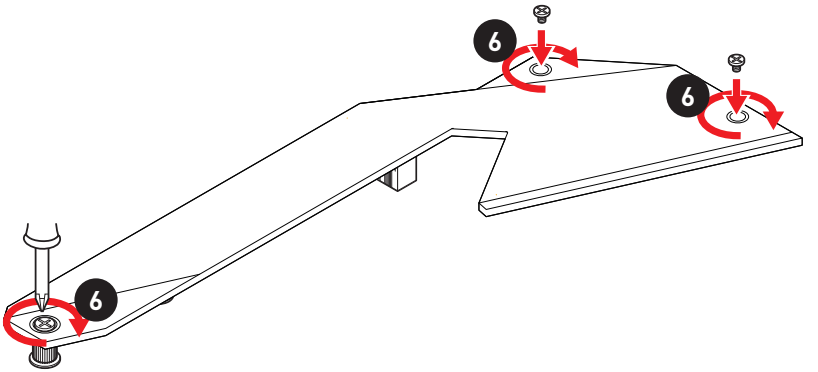

M2_2 installation

1. Move and fasten the M.2 standoff to the appropriate location for your M.2 SSD.
2. Insert your M.2 SSD into the M.2 slot at a 30-degree angle.
3. Secure the M.2 SSD in place with the 8.5H M.2 screw provided with motherboard package.

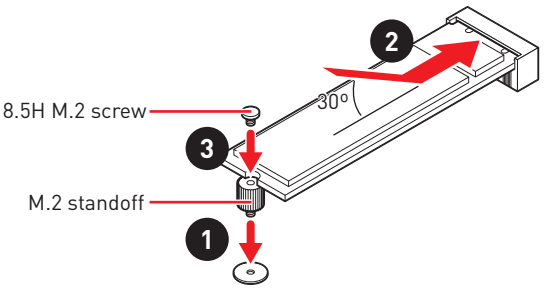

SATA1~6: SATA 6Gb/s Connectors

These connectors are SATA 6Gb/s interface ports. Each connector can connect to one SATA device.

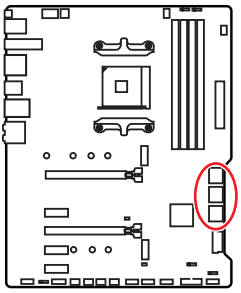

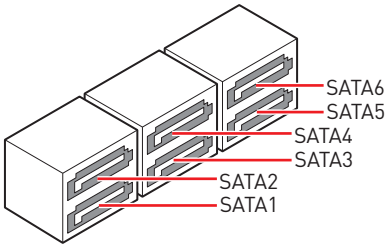

Important

- *Please do not fold the SATA cable at a 90-degree angle. Data loss may result during transmission otherwise.*
- *SATA cables have identical plugs on either sides of the cable. However, it is recommended that the flat connector be connected to the motherboard for space saving purposes.*

JFP1, JFP2: Front Panel Connectors

These connectors connect to the switches and LEDs on the front panel.

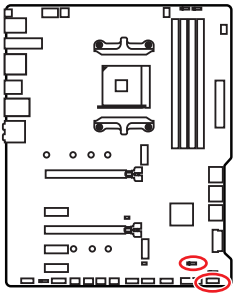

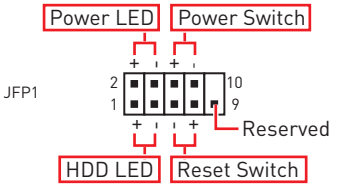

1	HDD LED +	2	Power LED +
3	HDD LED -	4	Power LED -
5	Reset Switch	6	Power Switch
7	Reset Switch	8	Power Switch
9	Reserved	10	No Pin

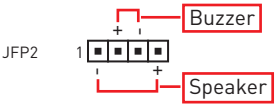

1	Speaker -	2	Buzzer +
3	Buzzer -	4	Speaker +

CPU_PWR1~2, ATX_PWR1: Power Connectors

These connectors allow you to connect an ATX power supply.

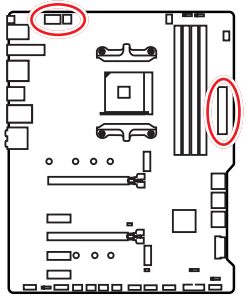

8 4 5 1 CPU_PWR1

1	Ground	5	+12V
2	Ground	6	+12V
3	Ground	7	+12V
4	Ground	8	+12V

4 2 3 1 CPU_PWR2

1	Ground	3	+12V
2	Ground	4	+12V

12 24 ATX_PWR1 1 13

1	+3.3V	13	+3.3V
2	+3.3V	14	-12V
3	Ground	15	Ground
4	+5V	16	PS-ON#
5	Ground	17	Ground
6	+5V	18	Ground
7	Ground	19	Ground
8	PWR OK	20	Res
9	5VSB	21	+5V
10	+12V	22	+5V
11	+12V	23	+5V
12	+3.3V	24	Ground

Important

Make sure that all the power cables are securely connected to a proper ATX power supply to ensure stable operation of the motherboard.

CPU_FAN1, PUMP_FAN1, SYS_FAN1~4: Fan Connectors

Fan connectors can be classified as PWM (Pulse Width Modulation) Mode or DC Mode. PWM Mode fan connectors provide constant 12V output and adjust fan speed with speed control signal. DC Mode fan connectors control fan speed by changing voltage. You can follow the instruction below to adjust the fan connector to PWM or DC Mode. CPU_FAN1 is the auto-detection mode fan connector, the system will auto detect the fan mode.

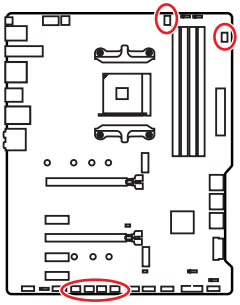



CPU_FAN1
(Auto-detection Mode)



PUMP_FAN1
(Default PWM mode)



SYS_FAN1~4
(Default DC mode)

Switching fan mode and adjusting fan speed

You can switch between PWM mode and DC mode and adjust fan speed in **BIOS > HARDWARE MONITOR**.

Select **PWM** mode or **DC** mode

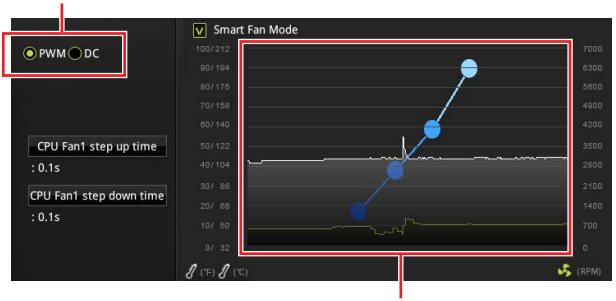

There are gradient points of the fan speed that allow you to adjust fan speed in relation to CPU temperature.

Important

Make sure fans are working properly after switching the PWM/ DC mode.

Pin definition of fan connectors

PWM Mode pin definition			
1	Ground	2	+12V
3	Sense	4	Speed Control Signal

DC Mode pin definition			
1	Ground	2	Voltage Control
3	Sense	4	NC

JUSB3~4: USB 3.2 Gen1 Connectors

These connectors allow you to connect USB 3.2 Gen1 ports on the front panel.

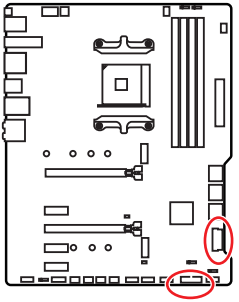

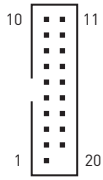

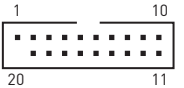

1	Power	11	USB2.0+
2	USB3_RX_DN	12	USB2.0-
3	USB3_RX_DP	13	Ground
4	Ground	14	USB3_TX_C_DP
5	USB3_TX_C_DN	15	USB3_TX_C_DN
6	USB3_TX_C_DP	16	Ground
7	Ground	17	USB3_RX_DP
8	USB2.0-	18	USB3_RX_DN
9	USB2.0+	19	Power
10	NC	20	No Pin

Important

Note that the Power and Ground pins must be connected correctly to avoid possible damage.

JUSB1~2: USB 2.0 Connectors

These connectors allow you to connect USB 2.0 ports on the front panel.

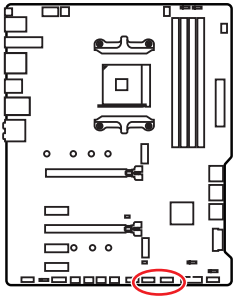

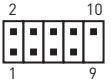

1	VCC	2	VCC
3	USB0-	4	USB1-
5	USB0+	6	USB1+
7	Ground	8	Ground
9	No Pin	10	NC

Important

- *Note that the VCC and Ground pins must be connected correctly to avoid possible damage.*
- *In order to recharge your iPad,iPhone and iPod through USB ports, please install MSI® DRAGON CENTER utility.*

JAUD1: Front Audio Connector

This connector allows you to connect audio jacks on the front panel.

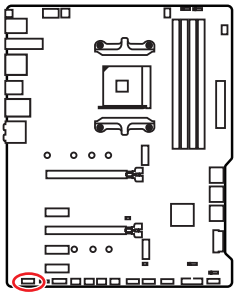

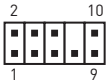

1	MIC L	2	Ground
3	MIC R	4	NC
5	Head Phone R	6	MIC Detection
7	SENSE_SEND	8	No Pin
9	Head Phone L	10	Head Phone Detection

JCOM1: Serial Port Connector

This connector allows you to connect the optional serial port with bracket.

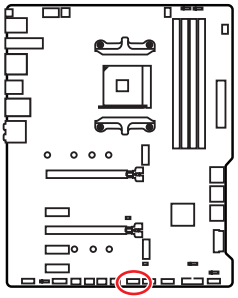



1	DCD	2	SIN
3	SOUT	4	DTR
5	Ground	6	DSR
7	RTS	8	CTS
9	RI	10	No Pin

JCI1: Chassis Intrusion Connector

This connector allows you to connect the chassis intrusion switch cable.

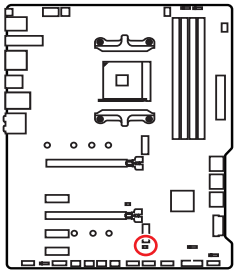



Normal

(default)



Trigger the chassis intrusion event

Using chassis intrusion detector

1. Connect the **JCI1** connector to the chassis intrusion switch/ sensor on the chassis.
2. Close the chassis cover.
3. Go to **BIOS > SETTINGS > Security > Chassis Intrusion Configuration**.
4. Set **Chassis Intrusion** to **Enabled**.
5. Press **F10** to save and exit and then press the **Enter** key to select **Yes**.
6. Once the chassis cover is opened again, a warning message will be displayed on screen when the computer is turned on.

Resetting the chassis intrusion warning

1. Go to **BIOS > SETTINGS > Security > Chassis Intrusion Configuration**.
2. Set **Chassis Intrusion** to **Reset**.
3. Press **F10** to save and exit and then press the **Enter** key to select **Yes**.

JBAT1: Clear CMOS (Reset BIOS) Jumper

There is CMOS memory onboard that is external powered from a battery located on the motherboard to save system configuration data. If you want to clear the system configuration, set the jumper to clear the CMOS memory.

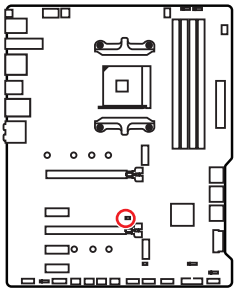



Keep Data (default)



Clear CMOS/ Reset BIOS

Resetting BIOS to default values

1. Power off the computer and unplug the power cord
2. Use a jumper cap to short JBAT1 for about 5-10 seconds.
3. Remove the jumper cap from JBAT1.
4. Plug the power cord and power on the computer.

EZ Debug LED

These LEDs indicate the debug status of the motherboard.

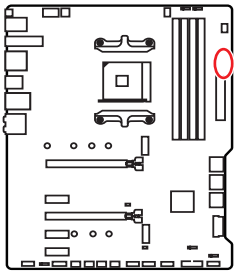

- **CPU** - indicates CPU is not detected or fail.
- **DRAM** - indicates DRAM is not detected or fail.
- **VGA** - indicates GPU is not detected or fail.
- **BOOT** - indicates the booting device is not detected or fail.

JRGB1~2: RGB LED connectors

The JRGB connectors allow you to connect the 5050 RGB LED strips 12V.

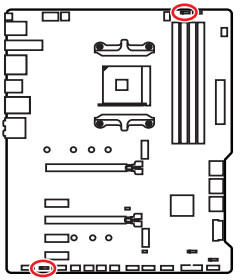

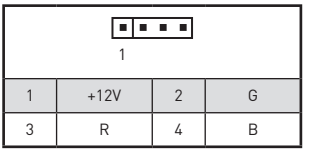

1	+12V	2	G
3	R	4	B

RGB LED Strip Connection

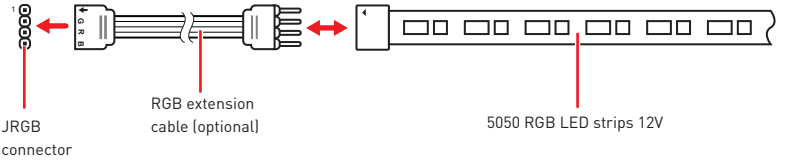

RGB LED Fan Connection

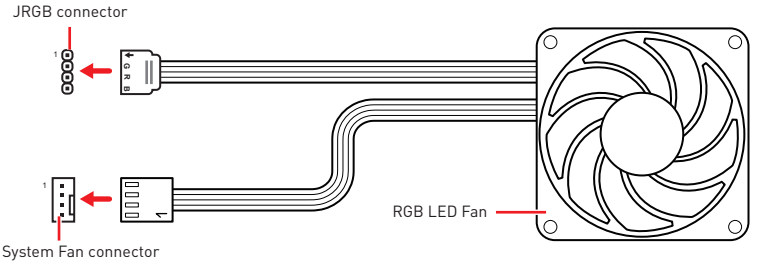

Important

- *An JRGB connector supports up to 2 meters continuous 5050 RGB LED strips (12V/G/R/B) with the maximum power rating of 3A (12V).*
- *Always turn off the power supply and unplug the power cord from the power outlet before installing or removing the RGB LED strip.*
- *Please use MSI' s software to control the extended LED strip.*

JRAINBOW1~2: Addressable RGB LED connectors

The JRAINBOW connectors allow you to connect the WS2812B Individually Addressable RGB LED strips 5V.

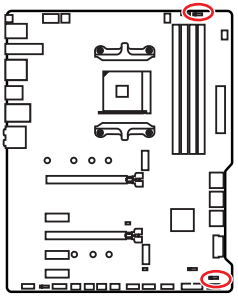

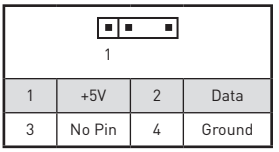

1	+5V	2	Data
3	No Pin	4	Ground

Addressable RGB LED Strip Connection

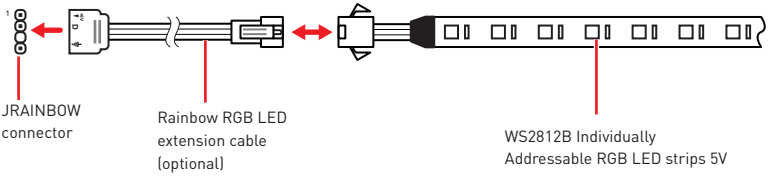

Addressable RGB LED Fan Connection

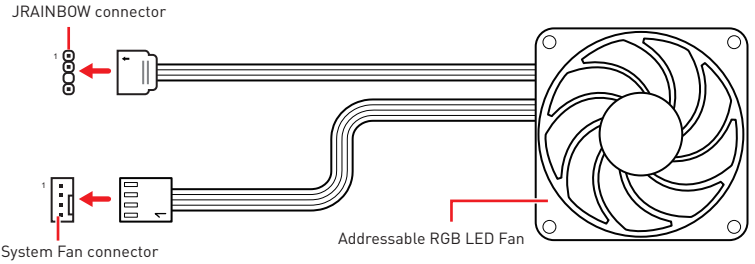

CAUTION

Do not connect the wrong type of LED strips. The JRGB connector and the JRAINBOW connector provide different voltages, and connecting the 5V LED strip to the JRGB connector will result in damage to the LED strip.

Important

- *The JRAINBOW connector supports up to 75 LEDs WS2812B Individually Addressable RGB LED strips (5V/Data/Ground) with the maximum power rating of 3A (5V). In the case of 20% brightness, the connector supports up to 200 LEDs.*
- *Always turn off the power supply and unplug the power cord from the power outlet before installing or removing the RGB LED strip.*
- *Please use MSI's software to control the extended LED strip.*

Installing OS, Drivers & Utilities

Please download and update the latest utilities and drivers at www.msi.com

Installing Windows® 10

1. Power on the computer.
2. Insert the Windows® 10 installation disc/USB into your computer.
3. Press the **Restart** button on the computer case.
4. Press **F11** key during the computer POST (Power-On Self Test) to get into Boot Menu.
5. Select the Windows® 10 installation disc/USB from the Boot Menu.
6. Press any key when screen shows **Press any key to boot from CD or DVD...** message.
7. Follow the instructions on the screen to install Windows® 10.

Installing Drivers

1. Start up your computer in Windows® 10.
2. Insert MSI® Driver Disc into your optical drive.
3. Click the **Select to choose what happens with this disc** pop-up notification, then select **Run DVDSetup.exe** to open the installer. If you turn off the AutoPlay feature from the Windows Control Panel, you can still manually execute the **DVDSetup.exe** from the root path of the MSI Driver Disc.
4. The installer will find and list all necessary drivers in the **Drivers/Software** tab.
5. Click the **Install** button in the lower-right corner of the window.
6. The drivers installation will then be in progress, after it has finished it will prompt you to restart.
7. Click **OK** button to finish.
8. Restart your computer.

Installing Utilities

Before you install utilities, you must complete drivers installation.

1. Open the installer as described above.
2. Click the **Utilities** tab.
3. Select the utilities you want to install.
4. Click the **Install** button in the lower-right corner of the window.
5. The utilities installation will then be in progress, after it has finished it will prompt you to restart.
6. Click **OK** button to finish.
7. Restart your computer.

BIOS Setup

The default settings offer the optimal performance for system stability in normal conditions. You should **always keep the default settings** to avoid possible system damage or failure booting unless you are familiar with BIOS.

Important

- *BIOS items are continuously update for better system performance. Therefore, the description may be slightly different from the latest BIOS and should be for reference only. You could also refer to the **HELP** information panel for BIOS item description.*
- *The pictures in this chapter are for reference only and may vary from the product you purchased.*
- *The BIOS items will vary with the processor.*

Entering BIOS Setup

Press **Delete** key, when the **Press DEL key to enter Setup Menu, F11 to enter Boot Menu** message appears on the screen during the boot process.

Function key

F1: General Help list

F2: Add/ Remove a favorite item

F3: Enter Favorites menu

F4: Enter CPU Specifications menu

F5: Enter Memory-Z menu

F6: Load optimized defaults

F7: Switch between Advanced mode and EZ mode

F8: Load Overclocking Profile

F9: Save Overclocking Profile

F10: Save Change and Reset*

F12: Take a screenshot and save it to USB flash drive (FAT/ FAT32 format only).

Ctrl+F: Enter Search page

* When you press F10, a confirmation window appears and it provides the modification information. Select between Yes or No to confirm your choice.

Resetting BIOS

You might need to restore the default BIOS setting to solve certain problems. There are several ways to reset BIOS:

- Go to BIOS and press **F6** to load optimized defaults.
- Short the **Clear CMOS** jumper on the motherboard.

Important

*Be sure the computer is off before clearing CMOS data. Please refer to the **Clear CMOS** jumper section for resetting BIOS.*

Updating BIOS

Updating BIOS with M-FLASH

Before updating:

Please download the latest BIOS file that matches your motherboard model from MSI website. And then save the BIOS file into the USB flash drive.

Updating BIOS:

1. Insert the USB flash drive that contains the update file into the USB port.
2. Please refer the following methods to enter flash mode.
   - Reboot and press **Ctrl + F5** key during POST and click on **Yes** to reboot the system.
   - Reboot and press **Del** key during POST to enter BIOS. Click the **M-FLASH** button and click on **Yes** to reboot the system.
3. Select a BIOS file to perform the BIOS update process.
4. After the flashing process is 100% completed, the system will reboot automatically.

Updating the BIOS with MSI DRAGON CENTER

Before updating:

Make sure the LAN driver is already installed and the internet connection is set properly.

Updating BIOS:

1. Install and launch MSI DRAGON CENTER.
2. Select **BIOS Update**.
3. Click on **Scan** button.
4. Click on **Download** icon to download and install the latest BIOS file.
5. Click **Next** and choose **In Windows mode**. And then click **Next** and **Start** to start updating BIOS.
6. After the flashing process is 100% completed, the system will restart automatically.

Updating BIOS with Flash BIOS Button

Before updating:

Please download the latest BIOS file that matches your motherboard model from MSI® website and rename the BIOS file to **MSI.ROM**. And then, save the **MSI.ROM** file to the root of USB flash drive.

Important

*Only the FAT32 format USB flash drive supports updating BIOS by **Flash BIOS Button**.*

1. Connect power supply to **CPU_PWR1** and **ATX_PWR1**. (No other components are necessary but power supply.)
2. Plug the USB flash drive that contains the MSI.ROM file into the **Flash BIOS** Port on rear I/O panel.
3. Press the **Flash BIOS** Button to flash BIOS, and the LED near the Button starts flashing.
4. After the flashing BIOS process is 100% completed, the LED would be off simultaneously.

EZ Mode

At EZ mode, it provides the basic system information and allows you to configure the basic setting. To configure the advanced BIOS settings, please enter the Advanced Mode by pressing the **Setup Mode switch** or **F7** function key.

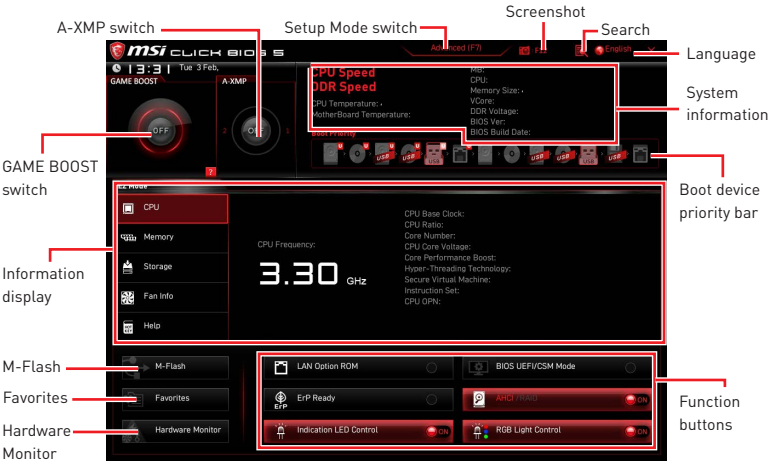

- **GAME BOOST switch** - click on it to toggle the GAME BOOST for OC.

Important

Please don't make any changes in OC menu and don't load defaults to keep the optimal performance and system stability after activating the GAME BOOST function.

- **A-XMP switch (optional)** - click on the inner circle to enable/ disable the A-XMP. Switch the outer circle to select the memory profile if any. This switch will only be available if the installed processor and memory modules support A-XMP function.

- **Setup Mode switch** - press this tab or the **F7** key to switch between Advanced mode and EZ mode.

- **Screenshot** - click on this tab or the **F12** key to take a screenshot and save it to USB flash drive (FAT/ FAT32 format only).

- **Search** - click on this tab or the **Ctrl+F** keys to enter the search page. It allows you to search by BIOS item name. Move the mouse over a blank space and right click the mouse to exit the search page.

Important

In search page, only the F6, F10 and F12 function keys are available.

- **Language** - allows you to select language of BIOS setup.

- **System information** - shows the CPU/ DDR speed, CPU/ MB temperature, MB/ CPU type, memory size, CPU/ DDR voltage, BIOS version and build date.

- **Boot device priority bar** - you can move the device icons to change the boot priority. The boot priority from high to low is left to right.

- **Information display** - click on the **CPU**, **Memory**, **Storage**, **Fan Info** and **Help** buttons on left side to display related information.

• **Function buttons** - enable or disable the **LAN Option ROM, ErP Ready, AHCI/ RAID, Indication LED Control, BIOS UEFI/CSM Mode** and **RGB Light Control** by clicking on their respective button.

• **M-Flash** - click on this button to display the **M-Flash** menu that provides the way to update BIOS with a USB flash drive.

• **Hardware Monitor** - click on this button to display the **Hardware Monitor** menu that allows you to manually control the fan speed by percentage.

• **Favorites** - press the **F3** key to enter **Favorites** menu. It allows you to create personal BIOS menu where you can save and access favorite/ frequently-used BIOS setting items.

▪ **Default HomePage** - allows you to select a BIOS menu (e.g. SETTINGS, OC...,etc) as the BIOS home page.

▪ **Favorite1~5** - allows you to add the frequently-used/ favorite BIOS setting items in one page.

▪ **To add a BIOS item to a favorite page (Favorite 1~5)**

1. Move the mouse over a BIOS item not only on BIOS menu but also on search page.
2. Right-click or press **F2** key.
3. Choose a favorite page and click on **OK.**

▪ **To delete a BIOS item from favorite page**

1. Move the mouse over a BIOS item on favorite page (Favorite 1~5)
2. Right-click or press **F2** key.
3. Choose **Delete** and click on **OK**.

Advanced Mode

Press **Setup Mode switch** or **F7** function key can switch between EZ Mode and Advanced Mode in BIOS setup.

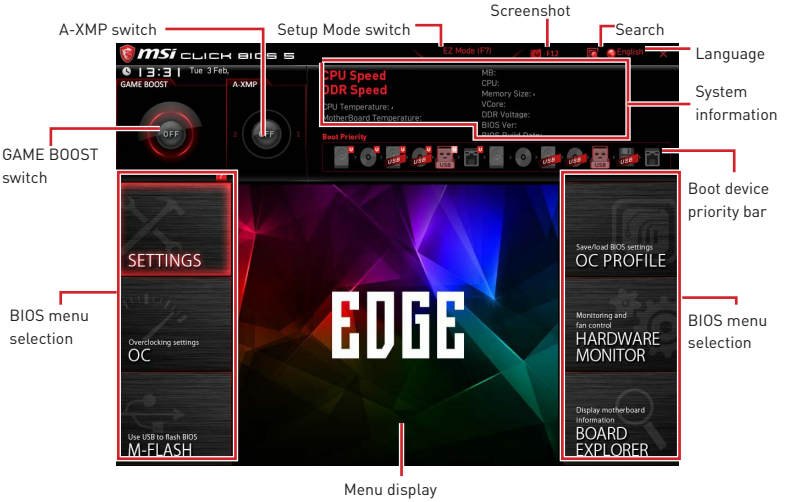

- **BIOS menu selection** - the following options are available:
  - **SETTINGS** - allows you to specify the parameters for chipset and boot devices.
  - **OC** - allows you to adjust the frequency and voltage. Increasing the frequency may get better performance.
  - **M-FLASH** - provides the way to update BIOS with a USB flash drive.
  - **OC PROFILE** - allows you to manage overclocking profiles.
  - **HARDWARE MONITOR** - allows you to set the speeds of fans and monitor voltages of system.
  - **BOARD EXPLORER** - provides the information of installed devices on this motherboard.
- **Menu display** - provides BIOS setting items and information to be configured.

SETTINGS



System Status

▶ System Date

Sets the system date. Use tab key to switch between date elements.

The format is <day> <month> <date> <year>.

<day>	Day of the week, from Sun to Sat, determined by BIOS. Read-only.
<month>	The month from Jan. through Dec.
<date>	The date from 1 to 31 can be keyed by numeric function keys.
<year>	The year can be adjusted by users.

▶ System Time

Sets the system time. Use tab key to switch between time elements.

The time format is <hour> <minute> <second>.

▶ SATA PortX

Shows the information of connected SATA device.

Important

If the connected SATA device is not displayed, turn off computer and re-check SATA cable and power cable connections of the device and motherboard.

▶ System Information

Shows detailed system information, including CPU type, BIOS version, and Memory (read only).

▶ DMI Information

Shows system information, desktop Board Information and chassis Information. (Read only).

Advanced

▶ PCI Subsystem Settings

Sets PCI, PCI express interface protocol and latency timer. Press **Enter** to enter the sub-menu.

▶ **Above 4G memory/ Crypto Currency mining [Disabled]**

Enables or disables 64-bit capable devices to be decoded in above 4G address space. It is only available if the system supports 64-bit PCI decoding.

[Enabled] Allows you to utilize more than 4x GPUs.

[Disabled] Disables this function.

▶ **PCH Gen Switch [Auto]**

Sets PCI Express protocol of PCIe x16 slots for matching different installed devices.

[Auto] This item will be configured automatically by BIOS.

[Gen1] Enables PCIe Gen1 support only.

[Gen2] Enables PCIe Gen2 support only.

[Gen3] Enables PCIe Gen3 support only.

[Gen4] Enables PCIe Gen4 support only.

▶ **PCIe SlotX Lanes Configuration**

PCIe lanes configuration is for MSI M.2 Xpander / MSI M.2 Xpander-Z / Other M.2 PCIe storage card. The options in this item will vary with the installed processor.

▶ **ACPI Settings**

Sets ACPI parameters of onboard power LED behaviors. Press **Enter** to enter the sub-menu.

▶ **Power LED [Blinking]**

Sets shining behaviors of the onboard Power LED.

[Dual Color] The power LED turns to another color to indicate the S3 state.

[Blinking] The power LED blinks to indicate the S3 state.

▶ **CPU Over Temperature Alert [Auto]**

Enables or disables the CPU overheating alert sound and message when CPU temperature is over 55 and 75 degrees centigrade.

▶ **Integrated Peripherals**

Sets integrated peripherals' parameters, such as LAN, HDD, USB and audio. Press **Enter** to enter the sub-menu.

▶ **Onboard LAN Controller [Enabled]**

Enables or disables the onboard LAN controller.

▶ **LAN Option ROM [Disabled]**

Enables or disables the legacy network Boot Option ROM for detailed settings. This item will appear when **Onboard LAN Controller** is enabled.

[Enabled] Enables the onboard LAN Boot ROM.

[Disabled] Disables the onboard LAN Boot ROM.

▶ **Network Stack [Disabled]**

Sets UEFI network stack for optimizing IPv4 / IPv6 function. This item is available when Onboard LAN Controller is Enabled.

[Enabled] Enables UEFI network stack.

[Disabled] Disables UEFI network stack.

▶ Ipv4 PXE Support [Enabled]

When **Enabled**, the system UEFI network stack will support Ipv4 protocol. This item will appear when **Network Stack** is Enabled.

[Enabled] Enables the Ipv4 PXE boot support.

[Disabled] Disables the Ipv4 PXE boot support.

▶ Ipv6 PXE Support [Enabled]

When **Enabled**, the system UEFI network stack will support Ipv6 protocol. This item will appear when **Network Stack** is enabled.

[Enabled] Enables the Ipv6 PXE boot support.

[Disabled] Disables the Ipv6 PXE boot support.

▶ SATA Mode [AHCI Mode]

Sets the operation mode of the onboard SATA controller.

[AHCI Mode] Specify the AHCI mode for SATA storage devices. AHCI (Advanced Host Controller Interface) offers some advanced features to enhance the speed and performance of SATA storage device, such as Native Command Queuing (NCQ) and hot-plugging.

[RAID Mode] Enables RAID function for SATA storage devices.

▶ SATAx Hot Plug [Disabled]

Allows user to enable or disable the SATA hot plug support.

[Enabled] Enables hot plug support for the SATA ports.

[Disabled] Disables hot plug support for the SATA ports.

▶ HD Audio Controller [Enabled]

Enables or disables the onboard High Definition Audio controller.

▶ Integrated Graphics Configuration (optional)

Adjusts integrated graphics settings for optimum system. Press **Enter** to enter the sub-menu.

▶ Initiate Graphic Adapter [PEG] (optional)

Selects a graphics device as the primary boot device.

[IGD] Integrated Graphics Display.

[PEG] PCI-Express Graphics Device.

▶ Integrated Graphics [Auto] (optional)

If set to Force, BIOS will enable the integrated graphics controller.

▶ UMA Frame Buffer Size [Auto] (optional)

Selects a fixed amount of system memory allocated to the onboard graphics. This item will be available when **Integrated Graphics** is enabled.

▶ USB Configuration

Sets the onboard USB controller and device function. Press **Enter** to enter the sub-menu.

▶ XHCI Hand-off [Enabled]

Enables or disables XHCI hand-off support for the operating system without XHCI hand-off feature.

▶ **Legacy USB Support [Enabled]**

Sets Legacy USB function support.

[Auto] The system will automatically detect if any USB device is connected and enable the legacy USB support.

[Enabled] Enable the USB support under legacy mode.

[Disabled] The USB devices will be unavailable under legacy mode.

▶ **Super IO Configuration**

Sets system Super I/O chip parameters including COM port. Press Enter to enter the sub-menu.

▶ **Serial (COM) Port x Configuration**

Sets detailed configuration of serial(COM) port x. Press **Enter** to enter the sub-menu.

▶ **Serial (COM) Port x [Enabled]**

Enables or disables serial (COM) port x.

▶ **Serial (COM) Port x Settings [Auto]**

Sets serial port x (COM). If set to **Auto**, BIOS will optimize the IRQ automatically or you can set it manually.

▶ **Power Management Setup**

Sets system Power Management of ErP and AC Power Loss behaviors. Press **Enter** to enter the sub-menu.

▶ **ErP Ready [Disabled]**

Enables or disables the system power consumption according to ErP regulation.

[Enabled] Optimize the system power consumption according to ErP regulation. It will not support S4 & S5 wake up by USB, PCI and PCIe devices.

[Disabled] Disables this function.

▶ **Restore after AC Power Loss [Power Off]**

Sets the system behaviors while encountering the AC power loss.

[Power Off] Leaves the system in power off state after restoring AC power.

[Power On] Boot up the system after restoring AC power.

[Last State] Restores the system to the previous state (power on/ power off) before AC power loss.

▶ **System Power Fault Protection [Disabled]**

Enables or disables the system to boot up when detecting abnormal voltage input.

[Enabled] Protect the system from unexpected power operating and remain the shut down status.

[Disabled] Disables this function.

▶ **Windows OS Configuration**

Sets Windows detailed configuration and behaviors. Press **Enter** to enter the sub-menu.

▶ **BIOS UEFI/CSM Mode [CSM]**

Select CSM (Compatibility Support Module) or UEFI mode to meet the system requirement.

[CSM] For the non-UEFI driver add-on devices or non-UEFI mode OS.

[UEFI] For the UEFI driver add-on devices and UEFI mode OS.

▶ **GOP Information**

Shows the onboard Graphics Output Protocol (GOP) information. Press **Enter** to enter the sub-menu. This sub-menu will appear when **BIOS UEFI/CSM Mode** sets to **UEFI**.

▶ **Secure Boot**

Sets the Windows secure boot to prevent the unauthorized accessing. Press **Enter** to enter the sub-menu. This sub-menu will appear when **BIOS UEFI/CSM Mode** sets to **UEFI**.

▶ **Wake Up Event Setup**

Sets system wake up behaviors for different sleep modes. Press **Enter** to enter the sub-menu.

▶ **Wake Up Event By [BIOS]**

Selects the wake up event by BIOS or operating system.

[BIOS] Activates the following items, set wake up events of these items.

[OS] The wake up events will be defined by OS.

▶ **Resume By RTC Alarm [Disabled]**

Disables or enables the system wake up by RTC Alarm.

[Enabled] Enables the system to boot up on a scheduled time/ date.

[Disabled] Disables this function.

▶ **Date (of month) Alarm/ Time (hh:mm:ss) Alarm**

Sets RTC alarm date/ Time. If Resume By RTC Alarm is set to [Enabled], the system will automatically resume (boot up) on a specified date/hour/minute/second in these fields (using the **+** and **-** keys to select the date & time settings).

▶ **Resume By PCI-E Device [Disabled]**

Enables or disables the wake up function of installed PCI-E expansion cards, integrated LAN controllers or USB devices which are supported by third party integrated chips.

[Enabled] Enables the system to be awakened from the power saving modes when activity or input signal of PCIe device is detected.

[Disabled] Disables this function.

▶ **Resume by USB Device [Disabled]**

Disables or enables system wake up from S3/S4 by USB device.

[Enabled] Enables the system to be awakened from sleep state when activity of USB device is detected.

[Disabled] Disables this function.

▶ **Resume From S3/S4/S5 by PS/2 Mouse [Disabled]**

Enables or disables the system wake up by PS/2 mouse.

[Enabled] Enables the system to be awakened from S3/ S4/ S5 state when activity of PS/2 mouse is detected.

[Disabled] Disables this function.

▶ **Resume From S3/S4/S5 by PS/2 Keyboard [Disabled]**

Enables or disables the system wake up by PS/2 keyboard.

[Any Key] Enables the system to be awakened from S3/ S4/ S5 state when activity of any key on PS/2 keyboard is detected.

[Hot Key] Enables the system to be awakened from S3/ S4/ S5 state when activity of hot key on PS/2 keyboard is detected.

[Disabled] Disables this function.

▶ **Hot Key [Ctrl+Space]**

Selects a combination of keys as a hot key to wake the system. This item appears when you set the **Resume From S3/S4/S5 by PS/2 Keyboard** to **Hot Key**.

▶ **Secure Erase+**

Enables or disables Secure Erase+ function. **Secure Erase+** is the best way to effectively wipe all data from a SSD. Please note that data of SSD will be erased after enabling **Secure Erase+**.

▶ **Realtek (R) 8111 Gigabit**

Shows driver information and configuration of the Ethernet controller parameter.

Boot

Sets the sequence of system boot devices.

▶ **Full Screen Logo Display [Enabled]**

Enables or disables to show the full screen logo while system POST.

[Enabled] Shows the logo in full screen.

[Disabled] Shows the POST messages.

▶ **Bootup NumLock State [On]**

Select the keyboard NumLock state upon bootup.

▶ **Info Block effect [Unlock]**

Sets the state of **Help** information block.

[Unlock] Sliding effect.

[Lock] Fix the **Help** information block on the screen.

▶ **POST Beep [Disabled]**

Enables or disables the POST beep.

▶ **AUTO CLR_CMOS [Disabled]**

Enables or disables the CMOS data to be resumed automatically when the system cannot boot to OS and reboot repeatedly.

▶ **Boot Mode Select [LEGACY+UEFI]**

Sets the system boot mode from legacy or UEFI architecture depending on OS installation requirement. This item will become un-selectable and will be configured automatically by BIOS when **BIOS UEFI/CSM Mode** sets to **UEFI**.

[UEFI]	Enables UEFI BIOS boot mode support only.
[LEGACY+UEFI]	Enables both Legacy BIOS boot mode and UEFI BIOS boot mode.

▶ **FIXED BOOT ORDER Priorities**

Sets device priority for system boot.

▶ **Boot Option Priorities**

These items are used to prioritize the installed boot devices.

Security

▶ **Administrator Password**

Sets administrator password for system security. User has full rights to change the BIOS items with administrator password. After setting the administrator password, the state of this item will show **Installed**.

▶ **User Password**

Sets User Password for system security. User has limited rights to change the BIOS items with user password. This item will be available when administrator password is set. After setting the user password, the state of this item will show **Installed**.

▶ **Password Check [Setup]**

Selects a condition that will request the password.

[Setup]	A password will be requested for entering the BIOS Setup.
[Boot]	A password will be requested for booting the system.

▶ **Password Clear [Enabled]**

Enables or disables the clear CMOS behavior to clear a set password.

[Enabled]	The password will be erased after clear CMOS.
[Disabled]	The password will always be kept.

Important

*When selecting the Administrator / User Password items, a password box will appear on the screen. Type the password then press **Enter**. The password typed now will replace any previous set password from CMOS memory. You will be prompted to confirm the password. You may also press **Esc** key to abort the selection.*

*To clear a set password, press **Enter** when you are prompted to enter a new password. A message will confirm the password is being disabled. Once the password is disabled, you can enter the setup and OS without authorization.*

▶ **Trusted Computing**

Sets TPM (Trusted Platform Module) function.

▶ **Security Device Support [Disabled]**

Enables or disables the TPM function to build the endorsement key for accessing the system.

▶ **AMD fTPM switch [AMD CPU fTPM]**

Selects TPM device. This item will appear when **Security Device Support** is enabled.

[AMD CPU fTPM]	Select it for AMD Firmware TPM.
[AMD CPU fTPM Disabled]	Select it for Discrete TPM.

▶ **Device Select [Auto]**

Sets the version of the TPM device. The version must be identical with the device. Sets to **Auto**, system will detect the TPM 2.0 or TPM 1.2 model automatically.

▶ **Chassis Intrusion Configuration**

Press **Enter** to enter the sub-menu.

▶ **Chassis Intrusion [Disabled]**

Enables or disables recording messages while the chassis is opened. This function is ready for the chassis equips a chassis intrusion switch.

[Enabled]	Once the chassis is opened, the system will record and issue a warning message.
[Reset]	Clear the warning message. After clearing the message, please return to **Enabled** or **Disabled**.
[Disabled]	Disables this funcion.

Save & Exit

▶ **Discard Changes and Exit**

Exit BIOS setup without saving any change.

▶ **Save Changes and Reboot**

Save all changes and reboot the system.

▶ **Save Changes**

Save current changes.

▶ **Discard Changes**

Discard all changes and restore to the previous values.

▶ **Restore Defaults**

Restore or load all default values.

▶ **Boot Override**

The installed boot-able devices will appear on this menu, you can select one of them to be the boot device.

OC

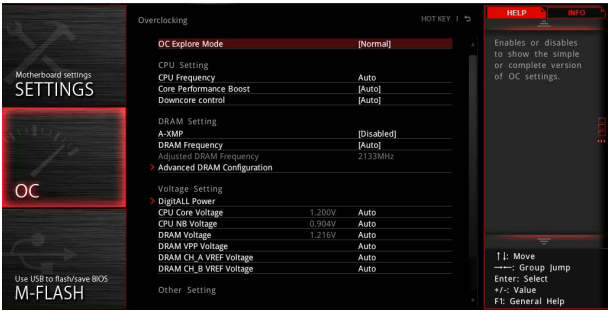

Important

- *Overclocking your PC manually is only recommended for advanced users.*
- *Overclocking is not guaranteed, and if done improperly, it could void your warranty or severely damage your hardware.*
- *If you are unfamiliar with overclocking, we advise you to use GAME BOOST function for easy overclocking.*
- *The BIOS items in OC menu will vary with the processor.*

▶ OC Explore Mode [Normal]

Enables or disables to show the normal or expert version of OC settings.

[Normal] Provides the regular OC settings in BIOS setup.

[Expert] Provides the advanced OC settings for OC expert to configure in BIOS setup.

Note: We use * as the symbol for the OC settings of Expert mode.

▶ CPU Ratio [Auto]

Sets the CPU ratio that is used to determine CPU clock speed. This item can only be changed if the processor supports this function.

▶ Advanced CPU Configuration

Press **Enter** to enter the sub-menu. User can set the parameters about CPU power/ current. The system may become unstable or unbootable after changing the parameters. If it occurs, please clear the CMOS data and restore the default settings.

▶ A-XMP [Disabled]

Please enable A-XMP or select a profile of memory module for overclocking the memory. This item will be available when the installed processor, memory modules and motherboard support this function.

▶ DRAM Frequency [Auto]

Sets the DRAM frequency. Please note the overclocking behavior is not guaranteed.

▶ Adjusted DRAM Frequency

Shows the adjusted DRAM frequency. Read-only.

▶ Advanced DRAM Configuration

Press **Enter** to enter the sub-menu. User can set the memory timing for each/ all memory channel. The system may become unstable or unbootable after changing memory timing. If it occurs, please clear the CMOS data and restore the default settings. (Refer to the Clear CMOS jumper section to clear the CMOS data, and enter the BIOS to load the default settings.)

▶ DigitALL Power

Press **Enter** to enter the sub-menu. Controls the digital powers related to CPU PWM.

▶ CPU Loadline Calibration Control [Auto]

The CPU voltage will decrease proportionally according to CPU loading. Higher load-line calibration could get higher voltage and good overclocking performance, but increase the temperature of the CPU and VRM. If set to **Auto**, BIOS will configure this setting automatically.

▶ CPU Over Voltage Protection [Auto]

Sets the voltage limit for CPU over-voltage protection. If set to **Auto**, BIOS will configure this setting automatically. Higher voltage provides less protection and may damage the system.

▶ CPU Under Voltage Protection [Auto]

Sets the voltage limit for CPU under-voltage protection. If set to **Auto**, BIOS will configure this setting automatically. Higher voltage provides less protection and may damage the system.

▶ CPU Over Current Protection [Auto]

Sets the current limit for CPU over-current protection. If set to **Auto**, BIOS will configure this setting automatically.

[Auto]	This setting will be configured automatically by BIOS.
[Enhanced]	Extends the current range for over-current protection.

▶ CPU NB Loadline Calibration Control [Auto]

The CPU-NB voltage will decrease proportionally according to CPU-NB loading. Higher load-line calibration could get higher voltage and good overclocking performance, but increase the temperature. If set to **Auto**, BIOS will configure this setting automatically.

▶ CPU Voltages control [Auto]

These options allows you to set the voltages related to CPU. If set to **Auto**, BIOS will set these voltages automatically or you can set it manually.

▶ DRAM Voltages control [Auto]

These options allows you to set the voltages related to memory. If set to **Auto**, BIOS will set these voltages automatically or you can set it manually.

▶ Memory Changed Detect [Enabled]*

Enables or disables the system to issue a warning message during boot when the memory has been replaced.

[Enabled] The system will issue a warning message during boot and then you have to load the default settings for new devices.

[Disabled] Disables this function and keeps the current BIOS settings.

▶ CPU Specifications

Press **Enter** to enter the sub-menu. This sub-menu displays the information of installed CPU. You can also access this information menu at any time by pressing [F4]. Read only.

▶ CPU Technology Support

Press **Enter** to enter the sub-menu. The sub-menu shows the key features of installed CPU. Read only.

▶ MEMORY-Z

Press **Enter** to enter the sub-menu. This sub-menu displays all the settings and timings of installed memory. You can also access this information menu at any time by pressing [F5].

▶ DIMMx Memory SPD

Press **Enter** to enter the sub-menu. The sub-menu displays the information of installed memory. Read only.

▶ CPU Features

Press **Enter** to enter the sub-menu.

▶ Simultaneous Multi-Threading [Enabled] (optional)

Enables/ disables the AMD Simultaneous Multi-Threading. This item appears when the installed CPU supports this technology.

▶ Global C-state Control [Enabled] (optional)

Enables/ disables IO based C-state generation and DF C-states.

▶ Opcache Control [Auto] (optional)

Enables/ disables Opcache. Opcache stores recent decode instruction to save the decoding time when the instruction is repeated. And it may increase the CPU performance and reduce the power consumption slightly.

▶ IOMMU Mode (optional)

Enables/disables the IOMMU (I/O Memory Management Unit) for I/O Virtualization.

▶ **Spread Spectrum (optional)**

This function reduces the EMI (Electromagnetic Interference) generated by modulating clock generator pulses.

[Enabled]	Enables the spread spectrum function to reduce the EMI (Electromagnetic Interference) problem.
[Disabled]	Enhances the overclocking ability of CPU Base clock.

Important

- *If you do not have any EMI problem, leave the setting at [Disabled] for optimal system stability and performance. But if you are plagued by EMI, select the value of Spread Spectrum for EMI reduction.*
- *The greater the Spread Spectrum value is, the greater the EMI is reduced, and the system will become less stable. For the most suitable Spread Spectrum value, please consult your local EMI regulation.*
- *Remember to disable Spread Spectrum if you are overclocking because even a slight jitter can introduce a temporary boost in clock speed which may just cause your overclocked processor to lock up.*

▶ **Relaxed EDC throttling [Auto] (optional)**

Relaxed EDC throttling reduces the amount of time the processor will throttle the cores.

[Auto]	AMD's recommendation
[Enabled]	Reduce the amount of time the processor will throttle.
[Disabled]	Part-specific EDC throttling protection enabled.

▶ **AMD Cool' n' Quiet [Enabled]**

The Cool' n' Quiet technology can effectively and dynamically lower CPU speed and power consumption.

▶ **SVM Mode [Enabled]**

Enables/ disables the AMD SVM (Secure Virtual Machine) Mode.

▶ **BIOS PSP Support [Enabled] (optional)**

Enables/ disables the BIOS PSP support. It manages PSP sub-items including all C2P/P2C mailbox, Secure S3, fTPM support.

▶ **Power Supply Idle Control [Auto] (optional)**

It allows you to select the power-saving control mode for the CPU when all cores are in a non-C0 state. If set to **Auto**, BIOS will configure these settings.

M-FLASH

M-FLASH provides the way to update BIOS with a USB flash drive. Please download the latest BIOS file that matches your motherboard model from MSI website, save the BIOS file into your USB flash drive. And then follow the steps below to update BIOS.

1. Insert the USB flash drive that contains the update file into the computer.
2. Click on **M-FLASH** tab, a demand message will be prompted. Click on **Yes** to reboot and enter the flash mode.



3. The system will enter the flash mode and a file selection menu will appear after rebooting.

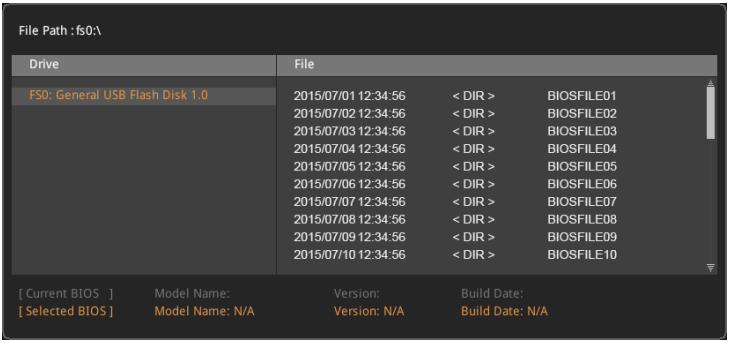

4. Select a BIOS file to perform the BIOS update process.
5. After the flashing process is 100% completed, the system will reboot automatically.

OC PROFILE



▶ Overclocking Profile 1/ 2/ 3/ 4/ 5/ 6

Overclocking Profile 1/ 2/ 3/ 4/ 5/ 6 management. Press **Enter** to enter the sub-menu.

▶ Set Name for Overclocking Profile 1/ 2/ 3/ 4/ 5/ 6

Name the current overclocking profile.

▶ Save Overclocking Profile 1/ 2/ 3/ 4/ 5/ 6

Save the current overclocking profile.

▶ Load Overclocking Profile 1/ 2/ 3/ 4/ 5/ 6

Load the current overclocking profile.

▶ Clear Overclocking Profile 1/ 2/ 3/ 4/ 5/ 6

Clear the current overclocking profile.

▶ OC Profile Load from ROM

Load OC profile from BIOS ROM.

▶ OC Profile Save to USB

Save OC profile to the USB flash drive. The USB flash drive should be FAT/ FAT32 format only.

▶ OC Profile Load from USB

Load OC profile from the USB flash drive. The USB flash drive should be FAT/ FAT32 format only.

HARDWARE MONITOR



▶ Temperature & Speed

Shows the current CPU temperature, system temperature and fans' speeds.

▶ Fan Manage

- **PWM** - allows you to select the PWM mode for fan operation.
- **DC** - allows you to select the DC mode for fan operation.
- **Fan step up/ down time** - allows you to set the period of fan step up/ down.
- **Smart Fan Mode field** - allows you to drag the gradient points to configure the fan target values for **Smart Fan** mode. **Smart Fan** can control the fan speed automatically depending on the CPU temperature to keep it with in a specific range. If the current CPU temperature reaches to the target value, the **Smart Fan** function will be activated.

Important

- *The changing will achieve after you save the changes and reboot the system.*
- *Make sure fans are working properly after switching the PWM/ DC mode.*

▶ Settings Buttons

- **All Full Speed** - configures all fans to run at full operating speed.
- **All Set Default** - configures all fans to run at default operating speed.
- **All Set Cancel** - discards current changes and restores previous operating fan speeds .

▶ Temperature/ Voltage display

Shows CPU/ system temperature and the current voltages of CPU, system and memory.

A-XMP Operation

System Requirements

- Supported AMD® Ryzen™ series processor
- Memory module supports XMP

How to enable A-XMP

Power on and press **Delete** key to enter BIOS Setup menu. Here are two methods below to enable A-XMP.

Method 1. BIOS EZ button

Click A-XMP button 1 or 2 to enable XMP profile 1 or profile 2.

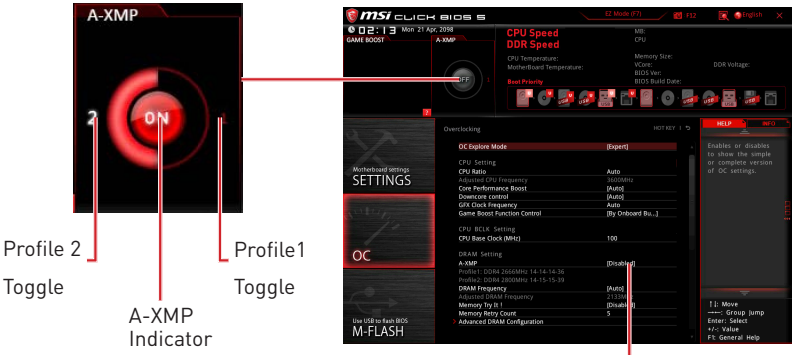

Method 2. BIOS item

Go to **BIOS > OC > A-XMP** and change setting to Profile 1 or Profile 2.



Note

- *Profile 1 is downgrade profile.*
- *Profile 2 is manufacturer verifies profile.*
- *The A-XMP button and item are only available when the system is supported.*

Nahimic 3

Nahimic 3 is designed to offer the best audio experience it contains audio effects, microphone effects and Sound Tracker.

Installation and Update

Nahimic 3 is included in the audio driver. If you need to install it or update it, please use the **Driver Disc** with your motherboard or download the driver from MSI' s official website.

Audio Tab

From this tab, you can access all of Nahimic 3' s audio effects, audio profiles and settings.

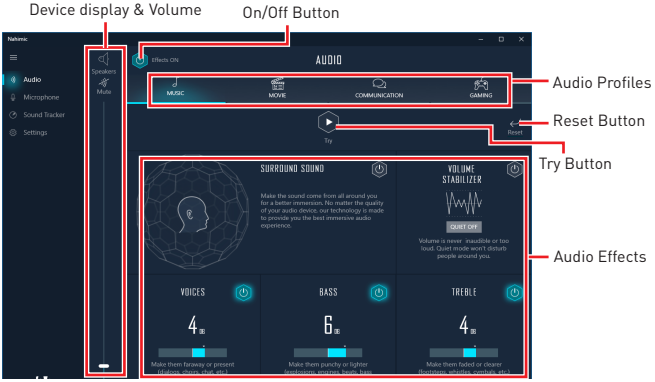

- **Device display & Volume** - displays the type of audio device currently being used as output, as well as its current volume.
  - **Mute** - mutes the current audio output device.
- **Audio profiles** - allows you to choose between 4 factory audio profiles to fit your multimedia experience (Music, Gaming, Movie or Communication). All profiles can be modified as you wish.
- **On/Off Button** - allows you to turn all of Nahimic 3' s audio effects in one click.
- **Audio Effects** - allows you to separately control any of the 5 audio effects.
  - **Surround Sound** - it is an audio effect mainly dedicated to headphones acoustic experience.
    - **Gaming and Movies** - virtualizes the multichannel audio stream from the game engine or the movie soundtrack and downmixes it in order to retrieve a multichannel listening experience over your stereo headphones or speakers.
    - **Music** - expands the stereo for a wider sound stage.
  - **Volume Stabilizer** - it maintains a constant volume for all elements of the audio experience (dialogs, soundtrack, explosions, etc.) to make them all sound softer, balanced or louder. The Quiet On / Off option allows to enter a night mode by removing some basses. This way, you won' t disturb people around you if you' re using speakers to play your media.

- **Voices** - it boosts (or removes) the speech in movies, video games and incoming communication from -12 to +12 dB.
- **Bass** - increases (or decreases) the energy in low frequencies from -12 to +12 dB.
- **Treble** - increases (or decreases) the energy in high frequencies from -12 to +12 dB.

• **Reset Button** - restores the current profile to its default values.

• **Try Button** - launches an audio sample that allows to test audio settings.

Microphone Tab

From this tab, you can access all of Nahimic 3' s microphone effects and settings.

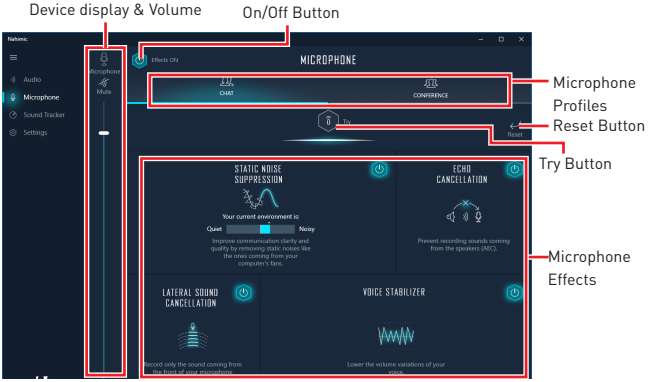

• **Device display and volume** - displays the type of recording device currently being used as input, as well as its current volume..

- **Mute** - mutes the current mic device.

• **Mic profiles** - allows you to choose between 2 factory mic profiles to fit your experience (Chat or Conference). All profiles can be modified as you wish.

• **On / Off button** - allows you to turn on and off all Nahimic 3' s microphone effects in one click.

• **Microphone Effects** - allows you to separately control any of the 4 microphone effects.

- **Static Noise Suppression** - it removes the static noises like the ones coming from your computer fans.
- **Echo Cancellation** - improves the voice quality by cancelling the echo.
- **Lateral Sound Cancellation** - it only records the sound coming from the front of your microphone.
- **Voice Stabilizer** - Levels the volume of your voice in order to avoid any saturation and maintains a constant and clear communication.

• **Reset Button** - restores the current profile to its default values.

• **Try Button** - Turns the microphone loopback On/Off.

Sound Tracker Tab

The Sound Tracker is an FPS oriented feature that provides a visual indication localizing the sources of the sounds while in a game. These are represented by dynamic segments pointing the direction of the sounds: the more opaque they are, the stronger the sounds are. Thanks to this feature, players are able to pick up an approaching threat more definitively and easily, thereby being even more dynamic. The Sound Tracker captures the 5.1 and 7.1 sound streams processed by your audio system, and is displayed in the applications and games using DirectX 9, 9c, 10 and 11.

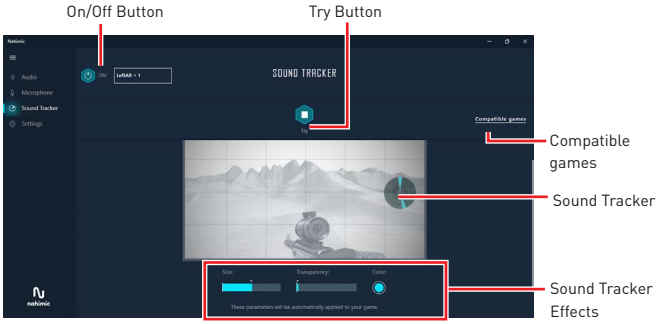

- **ON / OFF Button** - allows you to enable/ disable the Sound Tracker by switching this option ON/ OFF.
- **Try Button** - launch a 7.1 audio sample allowing you to preview how the radar will react in your game.
- **Sound Tracker Effects**
  - **Size** - allows you to adjust the scale of the Sound Tracker, making it look bigger or smaller.
  - **Transparency** - allows you to adjust the transparency of the Sound Tracker, making it look more or less discrete.
  - **Color** - click the colored circle to open the color edition window. You can apply the color you want to the dynamic segments.
- **Compatible games** - clicking this link opens the official Nahimic website, and leads to the list of compatible games able to display the Sound Tracker.

Settings Tab

In this section, it allows you to select the language of Nahimic 3' s UI.

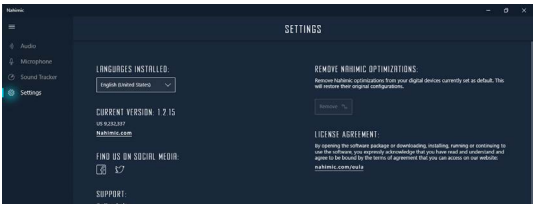

AMD RAID Configuration

The following are the RAID levels supported by RAIDXpert2.

RAID 0 (Striping) breaks the data into blocks which are written to separate hard drives. Spreading the hard drive I/O load across independent channels greatly improves I/O performance.

RAID 1 (Mirroring) provides data redundancy by mirroring data between the hard drives and provides enhanced read performance.

RAID 10 (Striped RAID1 Sets) uses four hard drives to create a combination of RAID 0 and 1 by forming a RAID 0 array from two RAID 1 arrays.

Volume (JBOD) provides the ability to link-together storage from one or several disks, regardless of the size of the space on those disks. Useful in scavenging space on disks unused by other disks in the array. Does not provide performance benefits or data redundancy.

RAIDABLE (also known as RAID Ready) allows the user to add more storage space or create a redundant array after a system is installed.

RAID level comparison

	RAID 0	RAID 1	RAID 10
Minimum # drives	2	2	4
Data protection	None	Excellent	Excellent
Read performance	Excellent	OK	OK
Write performance	Excellent	Good	Good
Capacity utilization	100%	50%	50%

Important

All the information/ volumes/ pictures listed in your system might differ from the illustrations in this appendix.

Enabling RAIDXpert2 Configuration Utility

To enter the RAIDXpert2 Configuration Utility menu

1. Power on and press **Delete** key to enter BIOS Setup menu.
2. Press **F7** to switch to Advanced mode from EZ mode.
3. Go to **BIOS > SETTINGS > Advanced > Integrated Peripherals > SATA Mode** and change setting to **RAID Mode**.
4. Go to **BIOS > SETTINGS > Advanced > Windows OS Configuration > BIOS UEFI/ CSM Mode** and change setting to **UEFI.**
5. Press **F10** to save configuration and exit, and then reboot and press **Delete** key to enter BIOS Setup menu.
6. Go to **BIOS > SETTINGS > Advanced > RAIDXpert2 Configuration Utility** sub-menu**.**

Initializing Disks

New disks and legacy disks must be initialized before they can be used to create an AMD-RAID array. Initialization writes AMD-RAID configuration information (metadata) to a disk.

Important

- *If a disk is part of an AMD-RAID array, the disk cannot be selected for initialization. To initial the disk anyway, delete the AMD-RAID array. Data on the disk is deleted during initialization so ensure the correct disks are chosen to initialize.*

- *A legacy disk can contain valid data. When a legacy disk is initialized, all data on the disk is lost.*

To initialize disks

1. As previously mentioned, enable RAIDXpert2 Configuration Utility.
2. Go to **BIOS > SETTINGS > Advanced > RAIDXpert2 Configuration Utility > Physical Disk Management > Select Physical Disk Operations > Initialize Disk** sub-menu**.**

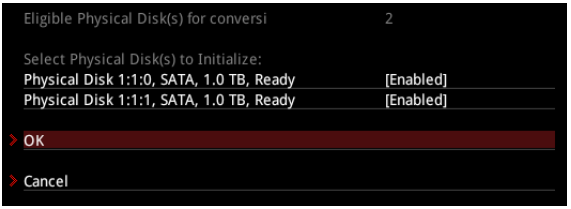

3. Select desired disks by changing the Physical Disk setting to **Enabled**.
4. Select **OK**, then press Enter.

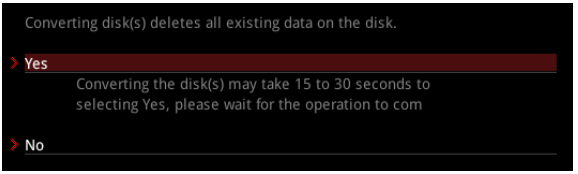

5. Review the warning message, if you want to proceed, select **YES**, then press Enter.
6. Initialization takes 10 to 15 seconds per disk. During initialization, a complete rescan of all channels is done automatically.

Creating Arrays

Arrays can be created after the disks are initialized.

Important

- *For redundant arrays, the Create process is not started until after the operating system and AMD-RAID OS drivers have been installed and the system has booted to the operating system. However, the arrays are immediately available to use for either a bootable array or a data array.*
- *Array numbers are valid only for a given boot and might be different in the RAIDXpert2 Configuration Utility and RAIDXpert2. If a permanent label is required, use the RAIDXpert2 Web GUI Array Naming feature.*
- *At any point in the procedure, return to a prior window by pressing ESC.*
- *If the system is booted from an AMD-RAID bootable array, the first array in the Arrays section must be the bootable array. The system boots only from the first array in the Arrays section.*

To create an array

1. As previously mentioned, enable RAIDXpert2 Configuration Utility.
2. Go to **BIOS > SETTINGS > Advanced > RAIDXpert2 Configuration Utility > Array Management > Create Array** sub-menu**.**

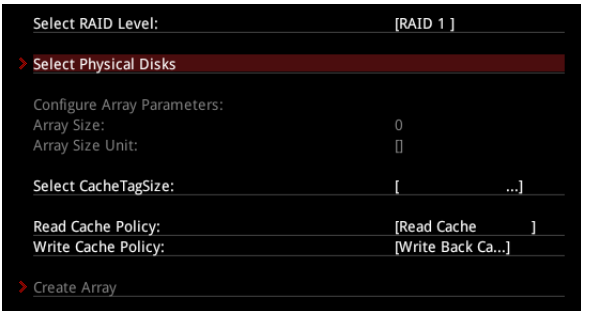

3. Select the RAID level from the **Select RAID Level** drop down menu.
4. Enter **Select Physical Disks** sub-menu, select member disks by changing the Physical Disk setting to **Enabled**.

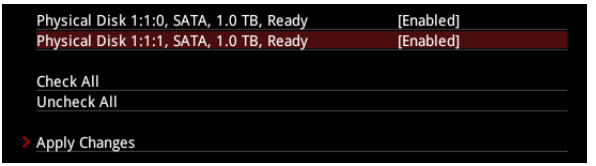

5. Select **Apply Changes**, then press Enter to apply and go back to previous sub-menu.
6. Change the **Select CacheTagSize**, **Read Cache Policy** and **Write Cache Policy** settings according to your needs.
7. Select **Create Array**, then press Enter.

Deleting Arrays

Important

- *Deleting an array permanently destroys all data that is on the array. This action cannot be undone and it is very unlikely that the data can be recovered.*
- *Do not delete the first array listed in the Arrays section, if it is the AMD-RAID bootable array. Doing this deletes the operating system and AMD-RAID files.*

To delete an array

1. As previously mentioned, enable RAIDXpert2 Configuration Utility.
2. Go to **BIOS > SETTINGS > Advanced > RAIDXpert2 Configuration Utility > Array Management > Delete Array** sub-menu**.**

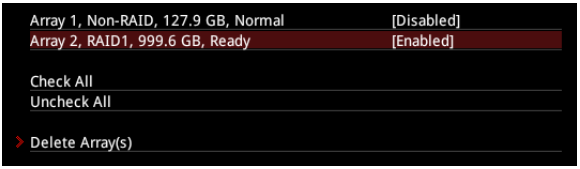

3. Select the desired array and change the setting to **Enabled**.
4. Enter **Delete Array(s)** sub-menu.

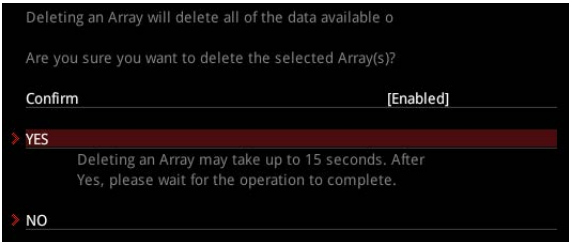

5. Review the warning message, if you want to proceed, Select **Confirm** and change the setting to **Enabled**.
6. Select **YES** then press Enter.

Installing RAID Driver

New Operating System Installation

The following details the installation of the drivers while installing operating system.

1. During the operating system installation, after selecting the location to install Windows click on **Load driver** button to install a third party RAID driver.
2. When prompted, insert the USB flash drive with **AMD RAID Drivers** and then click **Browse**.

   ▪ To make an **AMD RAID Drivers** USB flash drive. Insert the MSI Driver Disc into the optical drive. Copy all the contents in \\Storage\AMD\AMD\Packages\Drivers\SBDrv\RAID_NVMe
3. Navigate to the directory containing the saved AMD RAID drivers, then click **OK**.
4. Select the **(rcbottom.inf)** driver, click **Next**.
5. When prompted, click **OK.**
6. Click **Browse** and navigate to the directory containing the saved AMD RAID drivers again, then click **OK**.
7. Select the **(rcraid.inf)** driver, click **Next**.
8. You have successfully installed the RAID driver, and Windows setup should continue.
9. Leave the disk/ USB drive in the computer until the system reboots itself. Windows setup will need to copy the files after the RAID volume is formatted, and Windows setup starts copying files.

AMD RAIDXpert2 Management Suite Installation

1. Set the **SATA Mode** to **RAID Mode** in BIOS
2. Insert the MSI Driver Disc into the optical drive.
3. Click the **Select to choose what happens with this disc** pop-up notification, then select **Run DVDSetup.exe** to open the installer. If you turn off the AutoPlay feature from the Windows Control Panel, you can still manually execute the **DVDSetup.exe** from the root path of the MSI Driver Disc.
4. Under the **Drivers/Software** tab, check the **AMD RAID Drivers** check-box.
5. Click the **Install** button.
6. When prompt you to restart, click **OK** button to finish.
7. Restart your computer and enter the Windows operating system.
8. Double-click the **RAIDXpert2** icon to open the RAIDXpert2 Web GUI.

   ▪ Default credentials are:

   ▪ Username - **admin**

   ▪ Password - **admin**
9. Change the credentials:

   ▪ Create new username and password
10. Re-log into the RAIDXpert2 Web GUI with the new credentials.

Troubleshooting

Before sending the motherboard for RMA repair, try to go over troubleshooting guide first to see if your got similar symptoms as mentioned below.

The power is not on.

• Connect the AC power cord to an electrical outlet securely.

• Check if all ATX power connectors like **ATX_PWR1, CPU_PWR1~2** are connected from the power supply to the motherboard?

• Some power supply units have a power button on the rear side, make sure the button is turned on.

• Check if the power switch cable is connected to **JFP1** pin header properly.

• Verify the **Clear CMOS** jumper **JBAT1** is set to **Keep DATA**.

• Test with another known working power supply of equal or greater wattage.

The power is on, but no signal to monitor

• Connect the monitor power cord to a electrical outlet securely.

• Make sure the monitor is turned on.

• Select different inputs on the monitor.

• If 3 long beeps are heard, remove all memory modules and try to install only one memory module in the **DIMMA2** slot first and then restart the computer.

• If 1 long 2 short beeps are heard, remove and reinstall the graphics card and then restart the computer.

• Test with another known working graphics card.

The computer does not boot after updating the BIOS

• Clear the CMOS.

• Use the secondary BIOS to bootup the system (Only for motherboard with Dual BIOS)

Lost BIOS password

• Clear the CMOS, but that will cause you to lose all customized settings in the BIOS.

There is no audio

• Adjust the volume.

• Connect the speakers/headphones to audio ports on the motherboard rear IO panel.

• Remove secondary speakers/ headphones, HDMI™ cables, USB audio devices.

• Test with another known working speaker or headphone.

There is no network

• Make sure the network chipset driver has been installed.

• Verify if the network cable is properly connected and make sure the LAN port LEDs are properly illuminated.

• Verify your TCP/IP settings.

• Restart or reset your router.

• Test with another known working LAN cable.

The USB device is not working

• Make sure your USB drive driver has been installed.

• Verify if USB device is listed in Windows® Device Manager.

• Connect the USB device to other USB port on the motherboard rear IO panel.

Regulatory Notices

FCC Compliance Statement

Note: This equipment has been tested and found to comply with the limits for a Class B digital device, pursuant to part 15 of the FCC Rules. These limits are designed to provide reasonable protection against harmful interference in a residential installation. This equipment generates, uses and can radiate radio frequency energy and, if not installed and used in accordance with the instructions, may cause harmful interference to radio communications. However, there is no guarantee that interference will not occur in a particular installation. If this equipment does cause harmful interference to radio or television reception, which can be determined by turning the equipment off and on, the user is encouraged to try to correct the interference by one or more of the following measures:

- Reorient or relocate the receiving antenna.
- Increase the separation between the equipment and receiver.
- Connect the equipment into an outlet on a circuit different from that to which the receiver is connected.
- Consult the dealer or an experienced radio/TV technician for help.

Caution: Changes or modifications not expressly approved by the party responsible for compliance could void the user' s authority to operate the equipment.

Tested to comply with FCC standards
FOR HOME OR OFFICE USE

This device complies with part 15 of the FCC Rules. Operation is subject to the following two conditions: (1) This device may not cause harmful interference, and (2) this device must accept any interference received, including interference that may cause undesired operation.

CE Conformity

Products bearing the CE marking comply with one or more of the following EU Directives as may be applicable:
RED 2014/53/EU; Low Voltage Directive 2014/35/EU; EMC Directive 2014/30/EU; RoHS Directive 2011/65/EU. Compliance with these directives is assessed using applicable European Harmonized Standards.
The point of contact for regulatory matters is MSI, MSI-NL Eindhoven 5706 5692 ER Son.

B급 기기 (가정용 방송통신기자재)

이 기기는 가정용(B급) 전자파적합기기로서 주로 가정에서 사용하는 것을 목적으로 하며, 모든 지역에서 사용할 수 있습니다.

クラスB情報技術装置

この装置は、クラスB情報技術装置です。この装置は、家庭環境で使用することを目的としていますが、この装置がラジオやテレビジョン受信機に近接して使用されると、受信障害を引き起こすことがあります。取扱説明書に従って
正しい取り扱いをして下さい

VCCI-B

C-Tick Compliance

N1996

Battery Information

European Union:

Batteries, battery packs, and accumulators should not be disposed of as unsorted household waste. Please use the public collection system to return, recycle, or treat them in compliance with the local regulations.

Taiwan:

廢電池請回收
For better environmental protection, waste batteries should be collected separately for recycling or special disposal.

California, USA:

The button cell battery may contain perchlorate material and requires special handling when recycled or disposed of in California.
For further information please visit:
http://www.dtsc.ca.gov/hazardouswaste/perchlorate/

CAUTION: There is a risk of explosion, if battery is incorrectly replaced.
Replace only with the same or equivalent type recommended by the manufacturer.

Chemical Substances Information

In compliance with chemical substances regulations, such as the EU REACH Regulation (Regulation EC No. 1907/2006 of the European Parliament and the Council), MSI provides the information of chemical substances in products at:
http://www.msi.com/html/popup/csr/evmtprtt_pcm.html

Environmental Policy

- The product has been designed to enable proper reuse of parts and recycling and should not be thrown away at its end of life.
- Users should contact the local authorized point of collection for recycling and disposing of their end-of-life products.
- Visit the MSI website and locate a nearby distributor for further recycling information.
- Users may also reach us at gpcontdev@msi.com for information regarding proper Disposal, Take-back, Recycling, and Disassembly of MSI products.

WEEE (Waste Electrical and Electronic Equipment) Statement

ENGLISH
To protect the global environment and as an environmentalist, MSI must remind you that...

Under the European Union ("EU") Directive on Waste Electrical and Electronic Equipment, Directive 2002/96/EC, which takes effect on August 13, 2005, products of "electrical and electronic equipment" cannot be discarded as municipal wastes anymore, and manufacturers of covered electronic equipment will be obligated to take back such products at the end of their useful life. MSI will comply with the product take back requirements at the end of life of MSI-branded products that are sold into the EU. You can return these products to local collection points.

DEUTSCH
Hinweis von MSI zur Erhaltung und Schutz unserer Umwelt
Gemäß der Richtlinie 2002/96/EG über Elektro- und Elektronik-Altgeräte dürfen Elektro- und Elektronik-Altgeräte nicht mehr als kommunale Abfälle entsorgt werden. MSI hat europaweit verschiedene Sammel- und Recyclingunternehmen beauftragt, die in die Europäische Union in Verkehr gebrachten Produkte, am Ende seines Lebenszyklus zurückzunehmen. Bitte entsorgen Sie dieses Produkt zum gegebenen Zeitpunkt ausschliesslich an einer lokalen Altgerätesammelstelle in Ihrer Nähe.

FRANÇAIS
En tant qu'écologiste et afin de protéger l'environnement, MSI tient à rappeler ceci...
Au sujet de la directive européenne (EU) relative aux déchets des équipement électriques et électroniques, directive 2002/96/EC, prenant effet le 13 août 2005, que les produits électriques et électroniques ne peuvent être déposés dans les décharges ou tout simplement mis à la poubelle. Les fabricants de ces équipements seront obligés de récupérer certains produits en fin de vie. MSI prendra en compte cette exigence relative au retour des produits en fin de vie au sein de la communauté européenne. Par conséquent vous pouvez retourner localement ces matériels dans les points de collecte.

РУССКИЙ
Компания MSI предпринимает активные действия по защите окружающей среды, поэтому напоминаем вам, что....
В соответствии с директивой Европейского Союза (ЕС) по предотвращению загрязнения окружающей среды использованным электрическим и электронным оборудованием (директива WEEE 2002/96/EC), вступающей в силу 13 августа 2005 года, изделия, относящиеся к электрическому и электронному оборудованию, не могут рассматриваться как бытовой мусор, поэтому производители вышеперечисленного электронного оборудования обязаны принимать его для переработки по окончании срока службы. MSI обязуется соблюдать требования по приему продукции, проданной под маркой MSI на территории ЕС, в переработку по окончании срока службы. Вы можете вернуть эти изделия в специализированные пункты приема.

ESPAÑOL
MSI como empresa comprometida con la protección del medio ambiente, recomienda:
Bajo la directiva 2002/96/EC de la Unión Europea en materia de desechos y/o equipos electrónicos, con fecha de rigor desde el 13 de agosto de 2005, los productos clasificados como "eléctricos y equipos electrónicos" no pueden ser depositados en los contenedores habituales de su municipio, los fabricantes de equipos electrónicos, están obligados a hacerse cargo de dichos productos al termino de su período de vida. MSI estará comprometido con los términos de recogida de sus productos vendidos en la Unión Europea al final de su periodo de vida. Usted debe depositar estos productos en el punto limpio establecido por el ayuntamiento de su localidad o entregar a una empresa autorizada para la recogida de estos residuos.

NEDERLANDS
Om het milieu te beschermen, wil MSI u eraan herinneren dat....
De richtlijn van de Europese Unie (EU) met betrekking tot Vervuiling van Electrische en Electronische producten (2002/96/EC), die op 13 Augustus 2005 in zal gaan kunnen niet meer beschouwd worden als vervuiling. Fabrikanten van dit soort producten worden verplicht om producten retour te nemen aan het eind van hun levenscyclus. MSI zal overeenkomstig de richtlijn handelen voor de producten die de merknaam MSI dragen en verkocht zijn in de EU. Deze goederen kunnen geretourneerd worden op lokale inzamelingspunten.

SRPSKI
Da bi zaštitili prirodnu sredinu, i kao preduzeće koje vodi računa o okolini i prirodnoj sredini, MSI mora da vas podesti da...
Po Direktivi Evropske unije ("EU") o odbačenoj ekektronskoj i električnoj opremi, Direktiva 2002/96/EC, koja stupa na snagu od 13. Avgusta 2005, proizvodi koji spadaju pod "elektronsku i električnu opremu" ne mogu više biti odbačeni kao običan otpad i proizvođači ove opreme biće prinuđeni da uzmu natrag ove proizvode na kraju njihovog uobičajenog veka trajanja. MSI će poštovati zahtev o preuzimanju ovakvih proizvoda kojima je istekao vek trajanja, koji imaju MSI oznaku i koji su prodati u EU. Ove proizvode možete vratiti na lokalnim mestima za prikupljanje.

POLSKI
Aby chronić nasze środowisko naturalne oraz jako firma dbająca o ekologię, MSI przypomina, że...
Zgodnie z Dyrektywą Unii Europejskiej ("UE") dotyczącą odpadów produktów elektrycznych i elektronicznych (Dyrektywa 2002/96/EC), która wchodzi w życie 13 sierpnia 2005, tzw. "produkty oraz wyposażenie elektryczne i elektroniczne " nie mogą być traktowane jako śmieci komunalne, tak więc producenci tych produktów będą zobowiązani do odbierania ich w momencie gdy produkt jest wycofywany z użycia. MSI wypełni wymagania UE, przyjmując produkty (sprzedawane na terenie Unii Europejskiej) wycofywane z użycia. Produkty MSI będzie można zwracać w wyznaczonych punktach zbiorczych.

TÜRKÇE
Çevreci özelliğiyle bilinen MSI dünyada çevreyi korumak için hatırlatır:
Avrupa Birliği (AB) Kararnamesi Elektrik ve Elektronik Malzeme Atığı, 2002/96/EC Kararnamesi altında 13 Ağustos 2005 tarihinden itibaren geçerli olmak üzere, elektrikli ve elektronik malzemeler diğer atıklar gibi çöpe atılamayacak ve bu elektonik cihazların üreticileri, cihazların kullanım süreleri bittikten sonra ürünleri geri toplamakla yükümlü olacaktır. Avrupa Birliği'ne satılan MSI markalı ürünlerin kullanım

süreleri bittiğinde MSI ürünlerin geri alınması isteği ile işbirliği içerisinde olacaktır. Ürünlerinizi yerel toplama noktalarına bırakabilirsiniz.

ČESKY
Záleží nám na ochraně životního prostředí - společnost MSI upozorňuje...
Podle směrnice Evropské unie ("EU") o likvidaci elektrických a elektronických výrobků 2002/96/EC platné od 13. srpna 2005 je zakázáno likvidovat "elektrické a elektronické výrobky" v běžném komunálním odpadu a výrobci elektronických výrobků, na které se tato směrnice vztahuje, budou povinni odebírat takové výrobky zpět po skončení jejich životnosti. Společnost MSI splní požadavky na odebírání výrobků značky MSI, prodávaných v zemích EU, po skončení jejich životnosti. Tyto výrobky můžete odevzdat v místních sběrnách.

MAGYAR
Annak érdekében, hogy környezetünket megvédjük, illetve környezetvédőként fellépve az MSI emlékezteti Önt, hogy ...
Az Európai Unió („EU") 2005. augusztus 13-án hatályba lépő, az elektromos és elektronikus berendezések hulladékairól szóló 2002/96/EK irányelve szerint az elektromos és elektronikus berendezések többé nem kezelhetőek lakossági hulladékként, és az ilyen elektronikus berendezések gyártói kötelessé válnak az ilyen termékek visszavételére azok hasznos élettartama végén. Az MSI betartja a termékvisszavétellel kapcsolatos követelményeket az MSI márkanév alatt az EU-n belül értékesített termékek esetében, azok élettartamának végén. Az ilyen termékeket a legközelebbi gyűjtőhelyre viheti.

ITALIANO
Per proteggere l'ambiente, MSI, da sempre amica della natura, ti ricorda che....
In base alla Direttiva dell'Unione Europea (EU) sullo Smaltimento dei Materiali Elettrici ed Elettronici, Direttiva 2002/96/EC in vigore dal 13 Agosto 2005, prodotti appartenenti alla categoria dei Materiali Elettrici ed Elettronici non possono più essere eliminati come rifiuti municipali: i produttori di detti materiali saranno obbligati a ritirare ogni prodotto alla fine del suo ciclo di vita. MSI si adeguerà a tale Direttiva ritirando tutti i prodotti marchiati MSI che sono stati venduti all'interno dell'Unione Europea alla fine del loro ciclo di vita. È possibile portare i prodotti nel più vicino punto di raccolta

日本JIS C 0950材質宣言

日本工業規格JIS C 0950により、2006年7月1日以降に販売される特定分野の電気および電子機器について、製造者による含有物質の表示が義務付けられます。
http://www.msi.com/html/popup/csr/cemm_jp.html
http://tw.msi.com/html/popup/csr_tw/cemm_jp.html

India RoHS

This product complies with the "India E-waste (Management and Handling) Rule 2011" and prohibits use of lead, mercury, hexavalent chromium, polybrominated biphenyls or polybrominated diphenyl ethers in concentrations exceeding 0.1 weight % and 0.01 weight % for cadmium, except for the exemptions set in Schedule 2 of the Rule.

Türkiye EEE yönetmeliği

Türkiye Cumhuriyeti: EEE Yönetmeliğine Uygundur

Україна обмеження на наявність небезпечних речовин

Обладнання відповідає вимогам Технічного регламенту щодо обмеження використання деяких небезпечних речовин в електричному та електронному обладнані, затвердженого постановою Кабінету Міністрів України від 3 грудня 2008 № 1057.

Việt Nam RoHS

Kể từ ngày 01/12/2012, tất cả các sản phẩm do công ty MSI sản xuất tuân thủ Thông tư số 30/2011/TT-BCT quy định tạm thời về giới hạn hàm lượng cho phép của một số hóa chất độc hại có trong các sản phẩm điện, điện tử"

Wireless Radio Use

This device is restricted to indoor use when operating in the 2.4GHz, 5GHz frequency band.

Cet appareil doit être utilisé à l' intérieur.

당해 무선설비는 운용중 전파혼신 가능성이 있음.

この製品は、周波数帯域 2.4GHz, 5GHz で動作しているときは、屋内においてのみ使用可能です。

NCC無線設備警告聲明
工作頻率2.4GHz, 5GHz該頻段限於室內使用。
經型式認證合格之低功率射頻電機，非經許可，公司、商號或使用者均不得擅自變更頻率、加大功率或變更原設計之特性及功能。
低功率射頻電機之使用不得影響飛航安全及干擾合法通信；經發現有干擾現象時，應立即停用，並改善至無干擾時方得繼續使用。前項合法通信，指依電信法規定作業之無線電通信。低功率射頻電機須忍受合法通信或工業、科學及醫療用電波輻射性電機設備之干擾。

Products with radio functionality (EMF)
This product incorporates a radio transmitting and receiving device. For computers in normal use, a separation distance of 20 cm ensures that radio frequency exposure levels comply with EU requirements. Products designed to be operated at closer proximities, such as tablet computers, comply with applicable EU requirements in typical operating positions. Products can be operated without maintaining a separation distance unless otherwise indicated in instructions specific to the product.

Restrictions for products with radio functionality
CAUTION: IEEE 802.11x wireless LAN with 5.15–5.35 GHz frequency band is restricted for indoor use only in all European Union member states, EFTA (Iceland, Norway, Liechtenstein), and most other European countries (e.g., Switzerland, Turkey, Republic of Serbia).
Using this WLAN application outdoors might lead to interference issues with existing radio services.

Radio frequency bands and maximum power levels

Features	:802.11 a/b/g/n/ac, BT
Frequency Range	:2.4GHz, 5GHz
Modulation	:FHSS, DSSS, OFDM
Power Output	:10, 20, 23
Channel Band Width	:1, 5, 20 ,40 , 80MHz

产品中有害物质的名称及含量

部件名称	有害物质					
	铅 (Pb)	汞 (Hg)	镉 (Cd)	六价铬 (Cr(VI))	多溴联苯 (PBB)	多溴二苯醚 (PBDE)
印刷电路板组件*	╳	○	○	○	○	○
电池**	╳	○	○	○	○	○
外部信号连接头	╳	○	○	○	○	○
线材	╳	○	○	○	○	○

本表格依据 SJ/T 11364 的规定编制。

○: 表示该有害物质在该部件所有均质材料中的含量均在 GB/T 26572 规定的限量要求以下。

╳: 表示该有害物质至少在该部件的某一均质材料中的含量超出 GB/T 26572 规定的限量要求，但所有部件都符合欧盟RoHS要求。

* 印刷电路板组件: 包括印刷电路板及其构成的零部件。

** 电池本体上如有环保使用期限标识，以本体标识为主。

■ 上述有毒有害物质或元素清单会依型号之部件差异而有所增减。

■ 產品部件本体上如有环保使用期限标识，以本体标识为主。

限用物質含有情況標示聲明書

單元	限用物質及其化學符號					
	鉛 (Pb)	汞 (Hg)	鎘 (Cd)	六價鉻 (Cr^{+6})	多溴聯苯 (PBB)	多溴二苯醚 (PBDE)
電路板	○	○	○	○	○	○
電子元件	—	○	○	○	○	○
金屬機構件	—	○	○	○	○	○
塑膠機構件	○	○	○	○	○	○

備考1. “超出0.1 wt %” 及 “超出0.01 wt %” 係指限用物質之百分比含量超出百分比含量基準值。

備考2. “○” 係指該項限用物質之百分比含量未超出百分比含量基準值。

備考3. “—” 係指該項限用物質為排除項目。

Copyright

msi Micro-Star Int' l Co.,Ltd.
Copyright © 2019 All rights reserved.

The MSI logo used is a registered trademark of Micro-Star Int' l Co., Ltd. All other marks and names mentioned may be trademarks of their respective owners. No warranty as to accuracy or completeness is expressed or implied. MSI reserves the right to make changes to this document without prior notice.

Technical Support

If a problem arises with your system and no solution can be obtained from the user guide, please contact your place of purchase or local distributor. Alternatively, please try the following help resources for further guidance.

- Visit the MSI website for technical guide, BIOS updates, driver updates, and other information: http://**www.msi.com**
- Register your product at: http://**register.msi.com**

Revision History

Version 1.0, 2019/05, First release.
Version 1.1, 2019/08, Updated storage SPEC.



The terms HDMI™, HDMI™ High-Definition Multimedia Interface, HDMI™ Trade dress and the HDMI™ Logos are trademarks or registered trademarks of HDMI™ Licensing Administrator, Inc.