Quick Start

Thank you for purchasing the MSI® **MPG B550 GAMING CARBON WIFI** motherboard. This Quick Start section provides demonstration diagrams about how to install your computer. Some of the installations also provide video demonstrations. Please link to the URL to watch it with the web browser on your phone or tablet. You may have even link to the URL by scanning the QR code.

Preparing Tools and Components

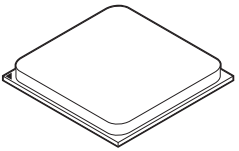

AMD® AM4 CPU

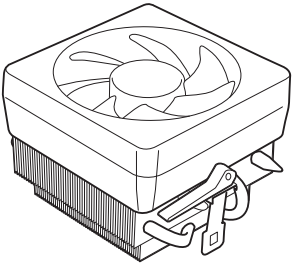

CPU Fan

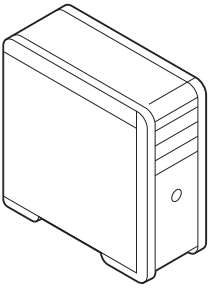

Chassis

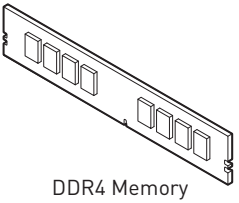

DDR4 Memory

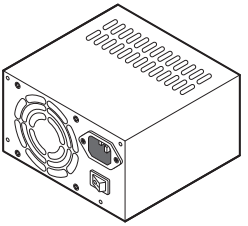

Power Supply Unit

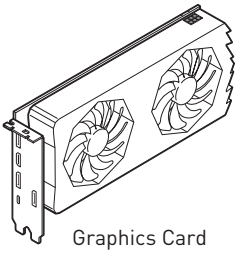

Graphics Card

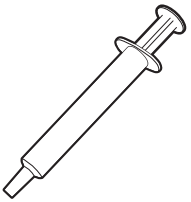

Thermal Paste

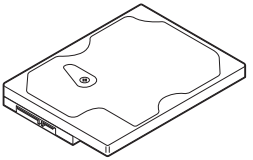

SATA Hard Disk Drive

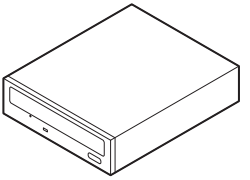

SATA DVD Drive

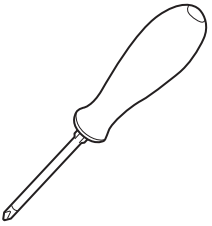

Phillips Screwdriver



A Package of Screws

Safety Information

• The components included in this package are prone to damage from electrostatic discharge (ESD). Please adhere to the following instructions to ensure successful computer assembly.

• Ensure that all components are securely connected. Loose connections may cause the computer to not recognize a component or fail to start.

• Hold the motherboard by the edges to avoid touching sensitive components.

• It is recommended to wear an electrostatic discharge (ESD) wrist strap when handling the motherboard to prevent electrostatic damage. If an ESD wrist strap is not available, discharge yourself of static electricity by touching another metal object before handling the motherboard.

• Store the motherboard in an electrostatic shielding container or on an anti-static pad whenever the motherboard is not installed.

• Before turning on the computer, ensure that there are no loose screws or metal components on the motherboard or anywhere within the computer case.

• Do not boot the computer before installation is completed. This could cause permanent damage to the components as well as injury to the user.

• If you need help during any installation step, please consult a certified computer technician.

• Always turn off the power supply and unplug the power cord from the power outlet before installing or removing any computer component.

• Keep this user guide for future reference.

• Keep this motherboard away from humidity.

• Make sure that your electrical outlet provides the same voltage as is indicated on the PSU, before connecting the PSU to the electrical outlet.

• Place the power cord such a way that people can not step on it. Do not place anything over the power cord.

• All cautions and warnings on the motherboard should be noted.

• If any of the following situations arises, get the motherboard checked by service personnel:

  - Liquid has penetrated into the computer.
  - The motherboard has been exposed to moisture.
  - The motherboard does not work well or you can not get it work according to user guide.
  - The motherboard has been dropped and damaged.
  - The motherboard has obvious sign of breakage.

• Do not leave this motherboard in an environment above 60°C (140°F), it may damage the motherboard.

Installing a Processor

https://youtu.be/Xv89nhFk1vc

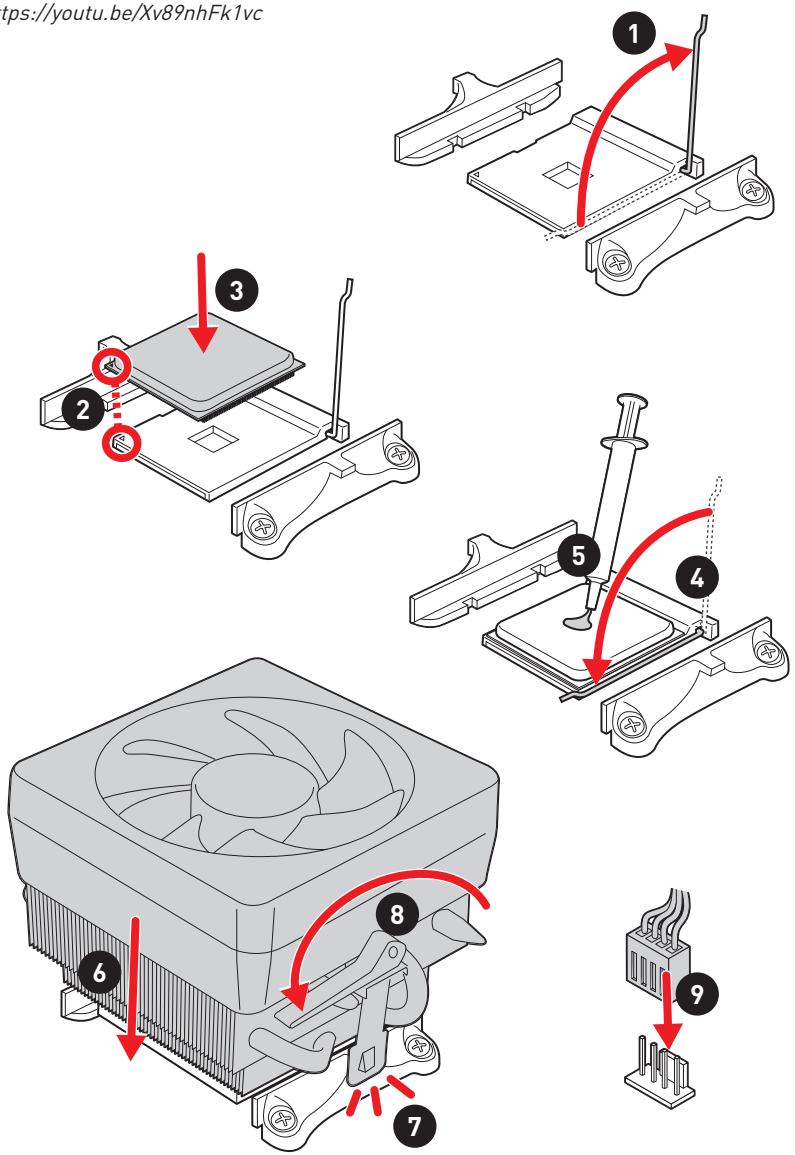

Important

If you are installing the screw-type CPU heatsink, please follow the figure below to remove the retention module first and then install the heatsink.

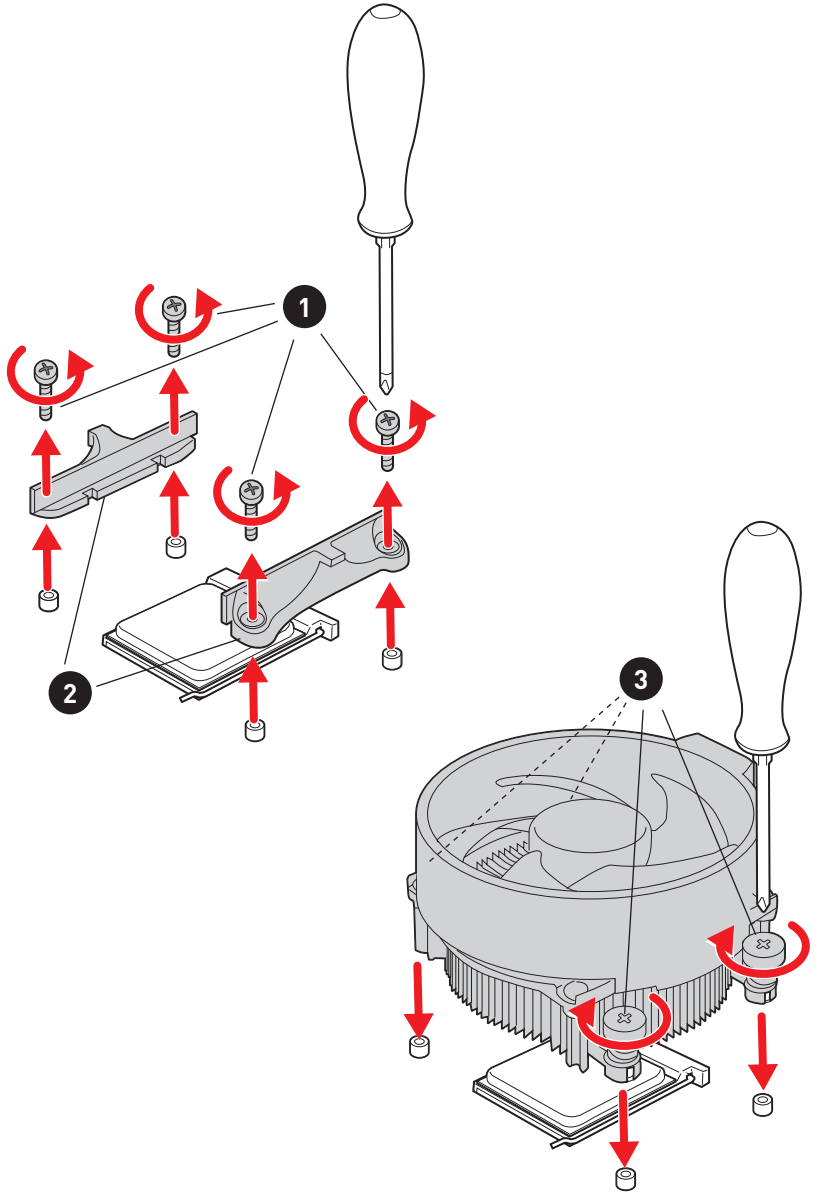

Installing DDR4 memory

http://youtu.be/T03aDrJPyQs

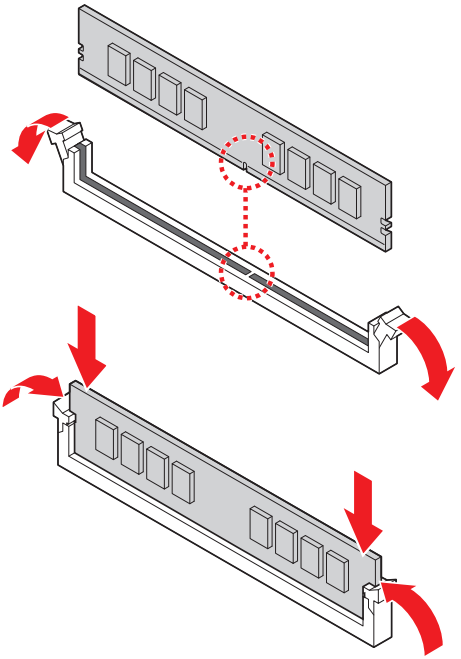

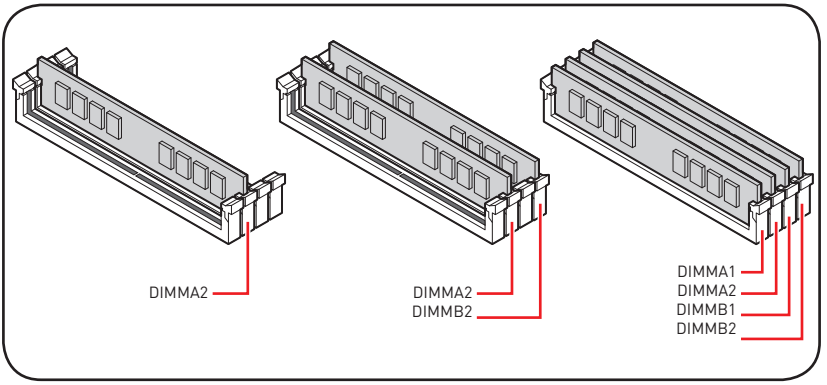

Connecting the Front Panel Header

http://youtu.be/DPELIdVNZUI

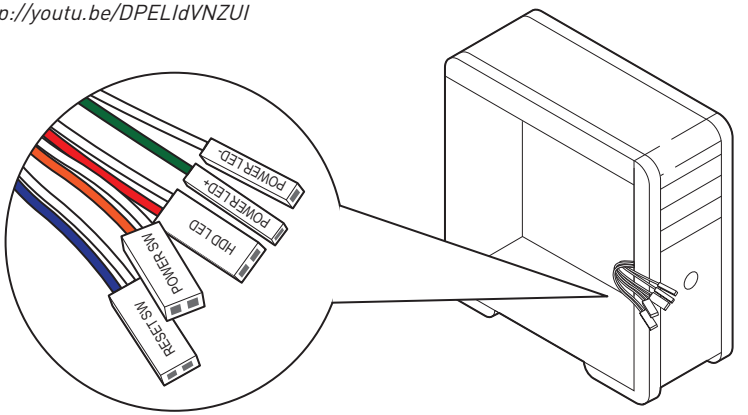

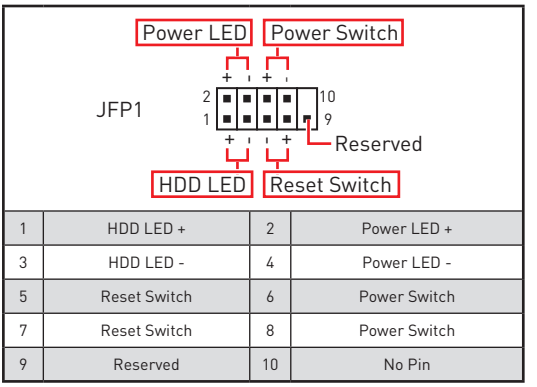

1	HDD LED +	2	Power LED +
3	HDD LED -	4	Power LED -
5	Reset Switch	6	Power Switch
7	Reset Switch	8	Power Switch
9	Reserved	10	No Pin

Installing the Motherboard

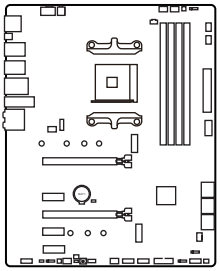

https://youtu.be/wWl6Qt51Wnc

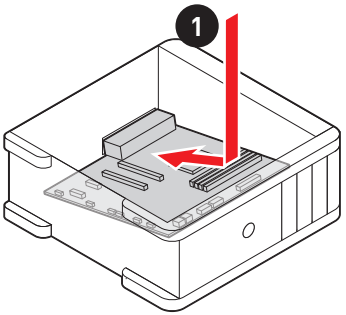

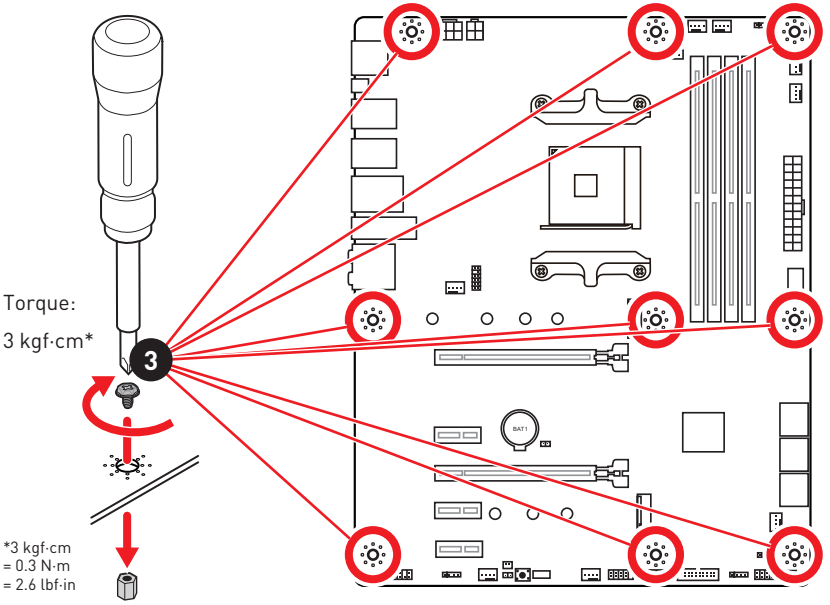

Connecting the Power Connectors

http://youtu.be/gkDYyR_83I4

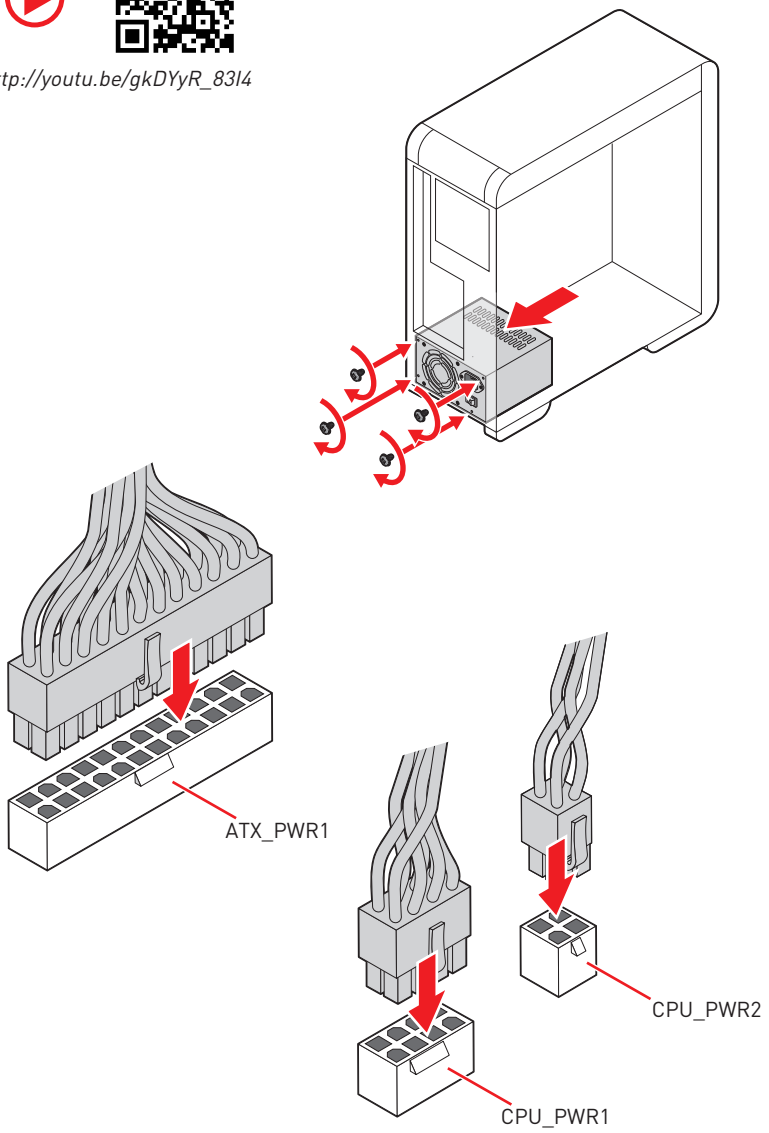

Installing SATA Drives

http://youtu.be/RZsMpqxythc

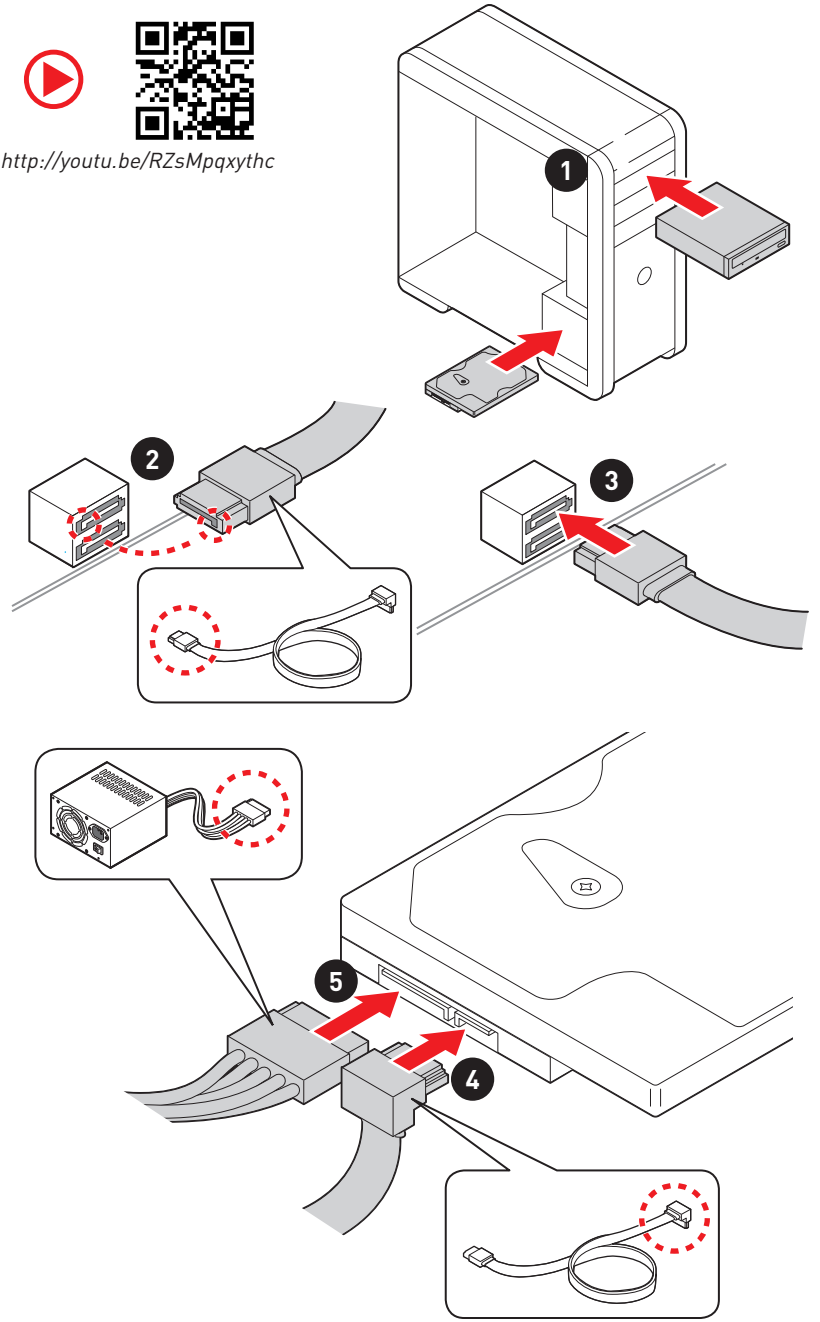

Installing a Graphics Card

http://youtu.be/mG0GZpr9w_A

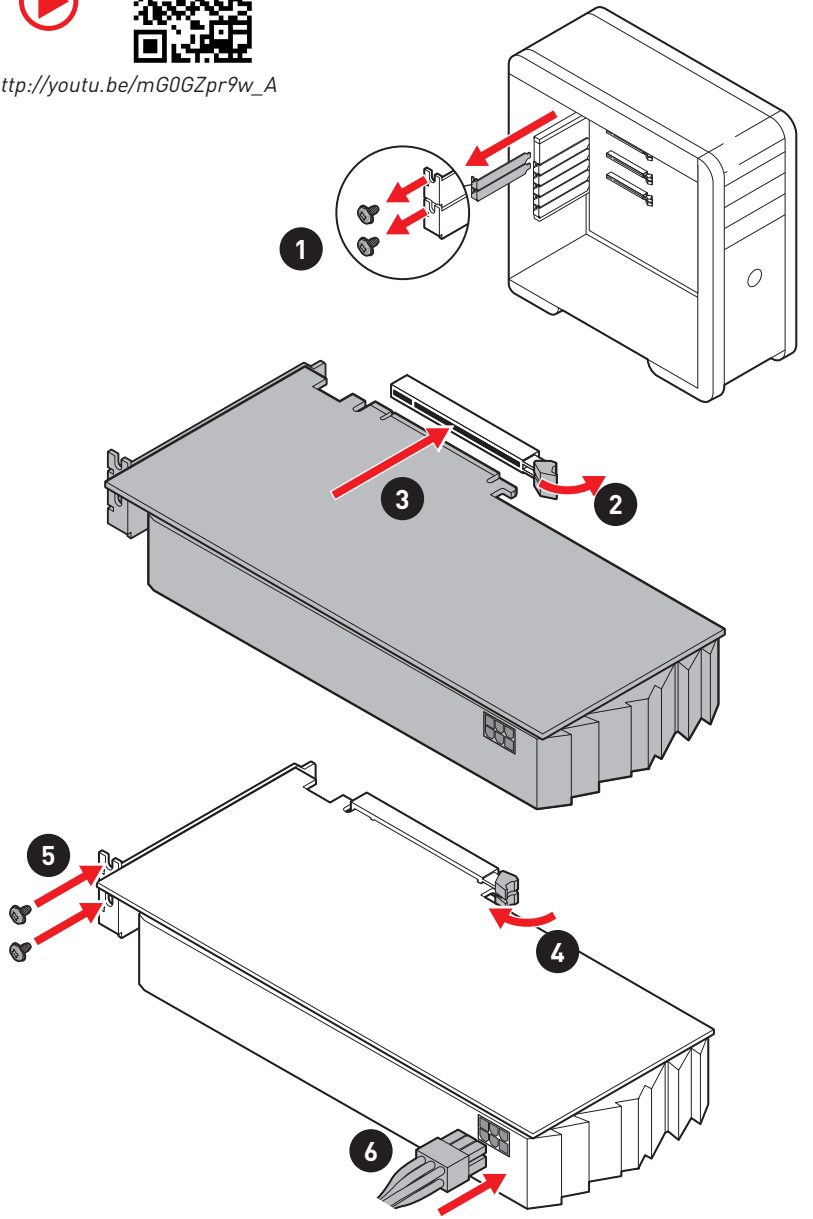

Connecting Peripheral Devices

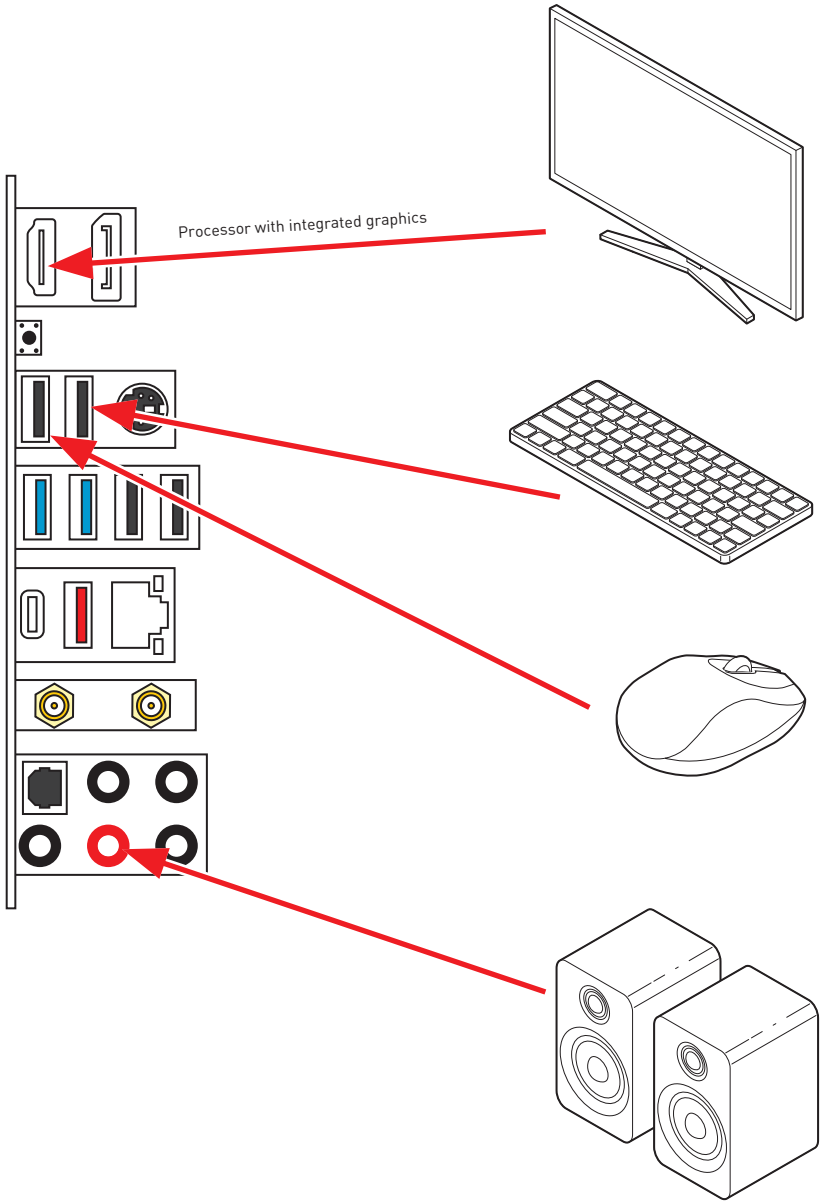

Power On

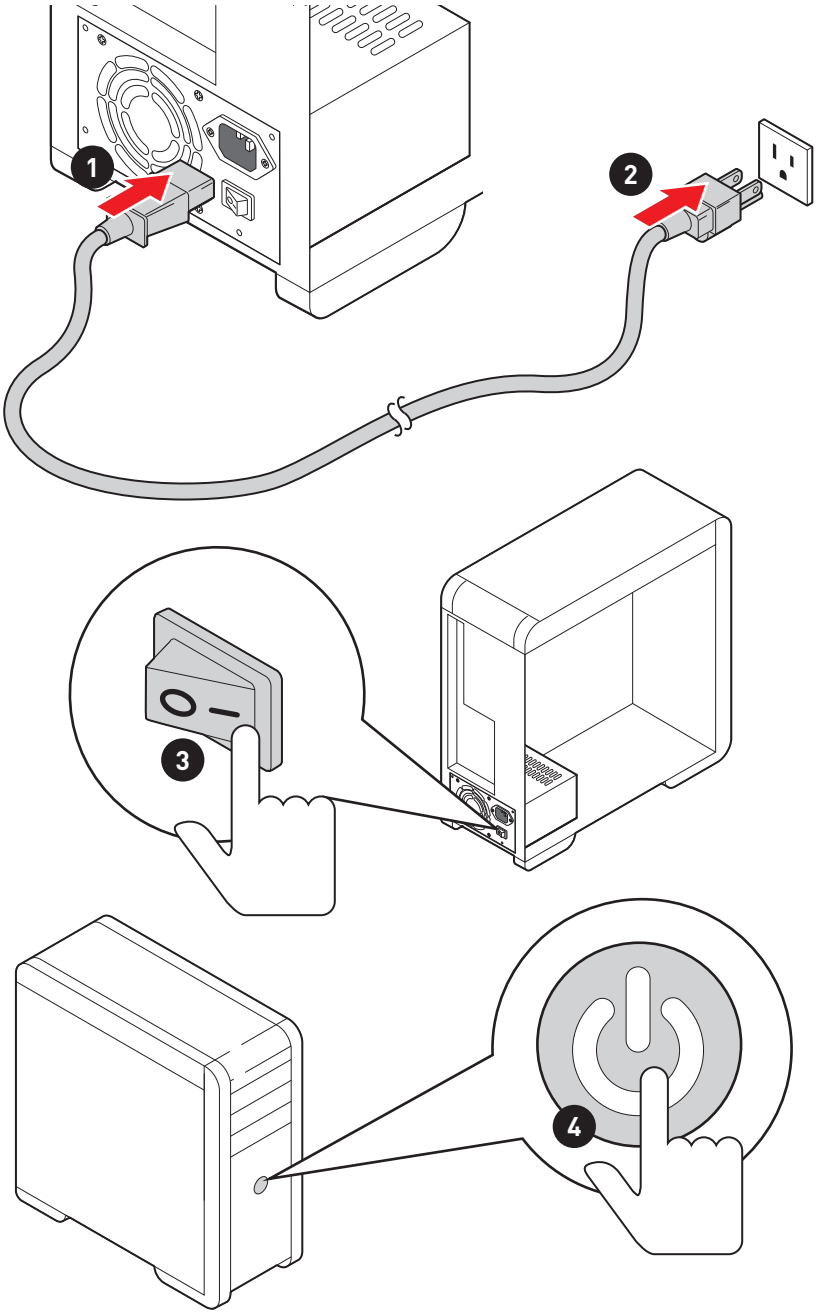

Contents

Quick Start **1**
Preparing Tools and Components 1
Safety Information 2
Installing a Processor 3
Installing DDR4 memory 5
Connecting the Front Panel Header 6
Installing the Motherboard 7
Connecting the Power Connectors 8
Installing SATA Drives 9
Installing a Graphics Card 10
Connecting Peripheral Devices 11
Power On 12
Specifications **15**
Package contents **21**
Block Diagram **22**
Rear I/O Panel **23**
LAN Port LED Status Table 23
Audio Ports Configuration 23
Realtek Audio Console 24
Overview of Components **27**
Processor Socket 29
DIMM Slots 30
PCI_E1~5: PCIe Expansion Slots 31
SATA1~6: SATA 6Gb/s Connectors 32
M2_1~2: M.2 Slots (Key M) 32
JFP1, JFP2: Front Panel Connectors 34
JAUD1: Front Audio Connector 34
CPU_PWR1~2, ATX_PWR1: Power Connectors 35
JUSB4: USB 3.2 Gen 1 5Gbps Type-C Connector 36
JUSB3: USB 3.2 Gen 1 5Gbps Connector 36
JUSB1~2: USB 2.0 Connectors 37
JTPM1: TPM Module Connector 37
CPU_FAN1, PUMP_FAN1, SYS_FAN1~6: Fan Connectors 38
JCI1: Chassis Intrusion Connector 39
T_SEN1: Thermal Sensor Connectors 39
JBAT1: Clear CMOS (Reset BIOS) Jumper 40

CLR_COMS1: Clear CMOS (Reset BIOS) Button 40
JRGB1: RGB LED connectors 41
JCORSAIR1: CORSAIR Connector 42
JRAINBOW1~2: Addressable RGB LED connectors 43
EZ Debug LED 44
LED_SW1: EZ LED Control 44
JPWRLED1: LED power input 44

Installing OS, Drivers & Utilities 45

Installing Windows® 10 45
Installing Drivers 45
Installing Utilities 45

UEFI BIOS 46

BIOS Setup 47
Entering BIOS Setup 47
Resetting BIOS 48
Updating BIOS 48
EZ Mode 50
Advanced Mode 53
SETTINGS Menu 54
OC Menu 56
M-FLASH Menu 58
OC PROFILE Menu 59
HARDWARE MONITOR Menu 60

AMD RAID Configuration 62

Enabling RAIDXpert2 Configuration Utility 62
Initializing Disks 63
Creating Arrays 64
Deleting Arrays 65
Installing RAID Driver 66

Troubleshooting 67

Specifications

CPU	Supports AM4 socket 3rd Gen AMD Ryzen™ processors, and future AMD Ryzen™ processors with BIOS update
Chipset	AMD B550 Chipset
Memory	• 4x DDR4 memory slots, support up to 128GB* ▪ Supports DDR4 1866/ 2133/ 2400/ 2667/ 2800/ 2933/ 3000/ 3066/ 3200 MHz by JEDEC ▪ Supports DDR4 2667/ 2800 /2933 /3000 /3066 /3200 /3466 /3600/ 3733 /3866 /4000 /4133 /4266 /4400 /4533 /4600/4733/4800/ 4866+ MHz by A-XMP OC MODE ▫ 1DPC 1R max speed 4866 MHz ▫ 1DPC 2R max speed 3866 MHz ▫ 2DPC 1R max speed 4000 MHz ▫ 2DPC 2R max speed 3600 MHz • Dual channel memory architecture • Supports non-ECC UDIMM memory • Supports ECC UDIMM memory (non-ECC mode) • Supports un-buffered memory * Please refer www.msi.com for more information on compatible memory.
Expansion Slot	• 1x PCIe 4.0/ 3.0 x16 slot (PCI_E1)* • 1x PCIe 3.0 x16 slot (PCI_E3), supports x4 speed** • 3x PCIe 3.0 x1 slots * The supported specification depends on installed processor. ** When installing devices in M.2_2, PCI_E2 & PCI_E3 slots at the same time, PCI_E3 slot will be unavailable, and M2_2 slot only supports PCIe x2. Please refer to page 31 for details.
Multi-GPU	• Supports 2-Way AMD CrossFire™ Technology
Onboard Graphics	• 1x HDMI 2.1 port, supports a maximum resolution of 4096x2160 @60Hz*/** • 1x DisplayPort 1.2 port, supports a maximum resolution of 4096x2160 @60Hz** • Maximum shared memory of 16 GB * Graphics specifications may vary depending on the CPU installed. ** Available for the processor with integrated graphics.

Continued on next page

Continued from previous page

Storage	AMD B550 Chipset • 6x SATA 6Gb/s ports • 2x M.2 slots (Key M) ▪ M2_1 slot (from AMD Processor) ▫ Supports PCIe 4.0/ 3.0 x4* ▫ Supports SATA 6Gb/s ▫ Supports 2242/ 2260/ 2280/ 22110 storage devices ▪ M2_2 slot (from AMD B550 chipset) ▫ Supports PCIe 3.0x4 ▫ Supports 2242/ 2260/ 2280 storage devices * The supported specification depends on installed processor.
RAID	• Supports RAID 0, RAID 1 and RAID 10 for SATA storage devices • Supports RAID 0 and RAID 1 for M.2 NVMe storage devices
USB	AMD B550 Chipset ▪ 3x USB 3.2 Gen 1 5Gbps ports (1 Type-C internal connector, and 2 ports are available through the internal USB 3.2 Gen 1 5Gbps connector) ▪ 8x USB 2.0 ports (4 Type-A ports on the back panel, 4 ports through the internal USB 2.0 connectors) AMD Processor ▪ 2x USB 3.2 Gen 2 10Gbps ports (1 Type-C port and 1 Type-A port on the back panel) ▪ 2x USB 3.2 Gen 1 5Gbps Type-A ports on the back panel
Audio	Realtek® ALC1200 Codec ▪ 7.1-Channel High Definition Audio ▪ Supports S/PDIF output
LAN	• 1x Realtek® RTL8125B 2.5Gbps LAN controller

Continued on next page

Continued from previous page

Wireless LAN & Bluetooth®	Intel® Wi-Fi 6 AX200/AX210* • The Wireless module is pre-installed in the M.2 (Key-E) slot • Supports MU-MIMO TX/RX, 2.4GHz/ 5GHz (160MHz) up to 2.4Gbps • Supports 802.11 a/ b/ g/ n/ ac/ ax • Supports Bluetooth® 5.1 * The wireless module varies according to the production batch.
Internal Connectors	• 1x 24-pin ATX main power connector • 1x 8-pin ATX 12V power connector • 1x 4-pin ATX 12V power connector • 6x SATA 6Gb/s connectors • 2x M.2 slots (M-Key) • 1x USB 3.2 Gen 1 5Gbps Type-C port • 1x USB 3.2 Gen 1 5Gbps connector (supports additional 2 USB 3.2 Gen 1 5Gbps ports) • 2x USB 2.0 connectors (supports additional 4 USB 2.0 ports) • 1x 4-pin CPU fan connector • 1x 4-pin water-pump fan connector • 6x 4-pin system fan connectors • 1x Front panel audio connector • 2x System panel connectors • 1x Chassis Intrusion connector • 1x 4-pin RGB LED connectors • 2x 3-pin RAINBOW LED connectors • 1x RGB CORSAIR connector • 1x TPM module connector • 1x Clear CMOS jumper
LED Features	• 1x EZ LED Control switch • 4x EZ Debug LED

Continued on next page

Continued from previous page

Back Panel Connectors	• 1x Display port • 1x HDMI port • 1x Flash BIOS Button • 1x PS/2 keyboard/ mouse combo port • 4x USB 2.0 Type-A ports • 2x USB 3.2 Gen 1 5Gbps Type-A ports • 1x LAN (RJ45) port • 1x USB 3.2 Gen 2 10Gbps Type-A port • 1x USB 3.2 Gen 2 10Gbps Type-C port • 2x Wi-Fi Antenna connectors • 5x audio jacks • 1x Optical S/PDIF Out connector
I/O Controller	NUVOTON NCT6687-R Controller Chip
Hardware Monitor	• CPU/ System/ Chipset temperature detection • CPU/ System/ Pump fan speed detection • CPU/ System/ Pump fan speed control
Form Factor	• ATX Form Factor • 12 in. x 9.6 in. (30.4 cm x 24.4 cm)
BIOS Features	• 1x 256 Mb flash • UEFI AMI BIOS • ACPI 6.0, SMBIOS 2.8 • Multi-language
Software	• Drivers • DRAGON CENTER • MSI APP Player (BlueStacks) • Open Broadcaster Software (OBS) • CPU-Z MSI GAMING • Google Chrome™, Google Toolbar, Google Drive • Norton™ Internet Security Solution

Continued on next page

Continued from previous page

Dragon Center Features	• Gaming Mode • Gaming Hotkey • LAN Manager • Mystic Light • Ambient Link • User Scenario • Hardware Monitor • True Color • Live Update • Speed Up • Smart Tool • Super Charger Please refer to http://download.msi.com/manual/mb/DRAGONCENTER2.pdf for more details.
Special Features	• Audio ▪ Audio Boost • Network ▪ 2.5G LAN ▪ LAN Manager with Realtek 8125B ▪ Intel WiFi • Cooling ▪ All Aluminum Design ▪ M.2 Shield Frozr ▪ Pump Fan ▪ Smart Fan Control • LED ▪ Mystic Light ▪ Mystic Light Extension (RAINBOW/RGB/CORSAIR) ▪ Mystic Light SYNC ▪ Ambient Link ▪ EZ LED Control ▪ EZ DEBUG LED

Continued on next page

Continued from previous page

Special Features	• Performance ▪ Multi GPU-CrossFire Technology ▪ DDR4 Boost ▪ Core Boost ▪ GAME Boost ▪ USB 3.2 Gen 2 10G ▪ USB with Type A+C ▪ Front USB Type-C ▪ Dual CPU Power (8+4 pin) ▪ CPU Power Design (12+2+1) • Protection ▪ PCI-E Steel Armor ▪ PCI-E Steel Slot ▪ Pre-installed I/O Shielding • Experience ▪ Dragon Center ▪ Click BIOS 5 ▪ Flash BIOS Button

Package contents

Please check the contents of your motherboard package. It should contain:

Motherboard	MPG B550 GAMING CARBON WIFI	
Cable	SATA 6G cables (2 cables/pack)	1
	Thermistor cable	1
Accessories	Wi-Fi antenna	1
	80cm JRAINBOW cable (3pin-to-4pin)	1
	M.2 screws (3 pcs./pack)	1
	Case badge	1
	Product registration card	1
	SATA cable Labels	1
Application	Driver DVD	1
Documentation	User manual	1
	Quick installation guide	1
	MSI components compatibility & reward program card	1
	case stand-off notificaton	1

Important

If any of the above items are damaged or missing, please contact your retailer.

Block Diagram

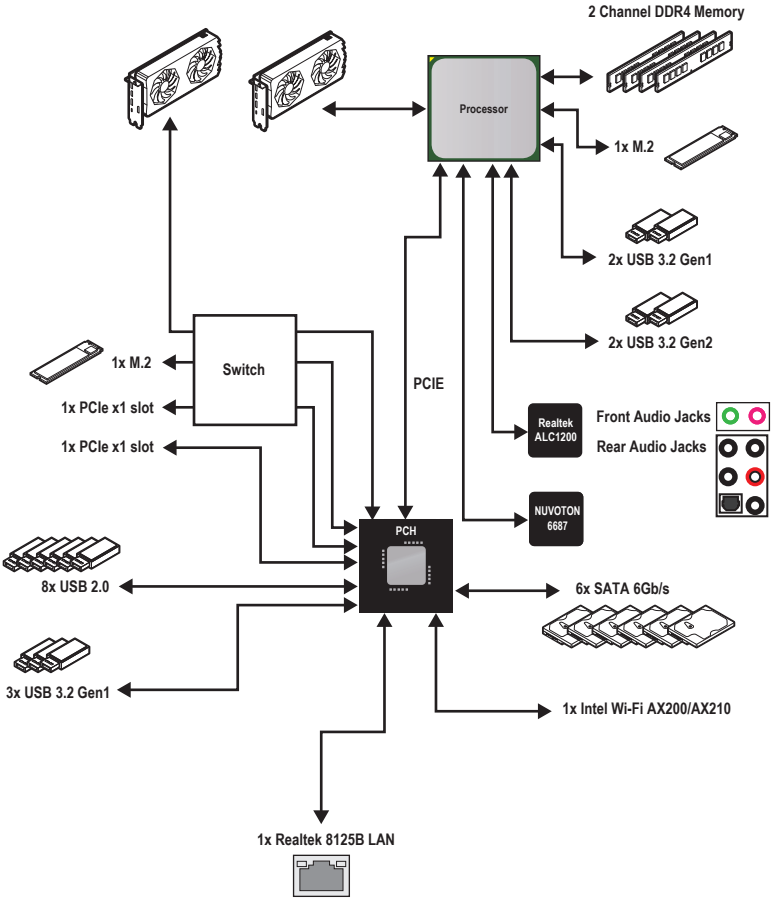

Rear I/O Panel

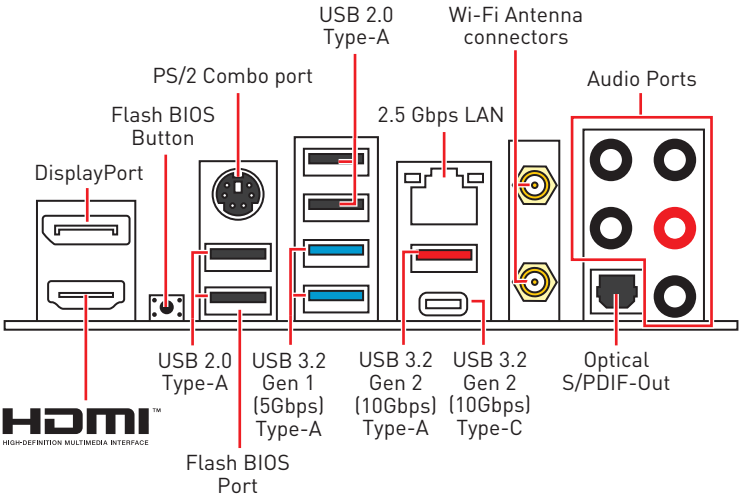

• **Flash BIOS Port/ Button** - Please refer to page 49 for Updating BIOS with Flash BIOS Button.

LAN Port LED Status Table

Link/ Activity LED	
Status	**Description**
Off	No link
Yellow	Linked
Blinking	Data activity

Speed LED	
Status	**2.5 Gbps LAN**
Off	10 Mbps
Green	100/ 1000 Mbps
Orange	2.5 Gbps

Audio Ports Configuration

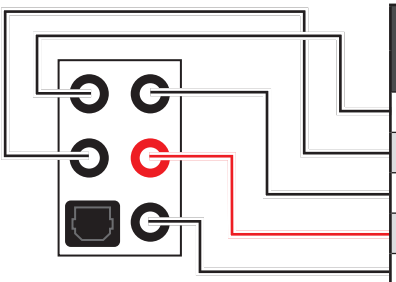

Audio Ports	Channel			
	2	4	6	8
Center/ Sub-woofer Out			●	●
Rear Speaker Out		●	●	●
Line-In/ Side Speaker Out				●
Line-Out/ Front Speaker Out	●	●	●	●
Mic In				

(●: connected, **Blank**: empty)

Realtek Audio Console

After Realtek Audio Console is installed. You can use it to change sound settings to get better sound experience.

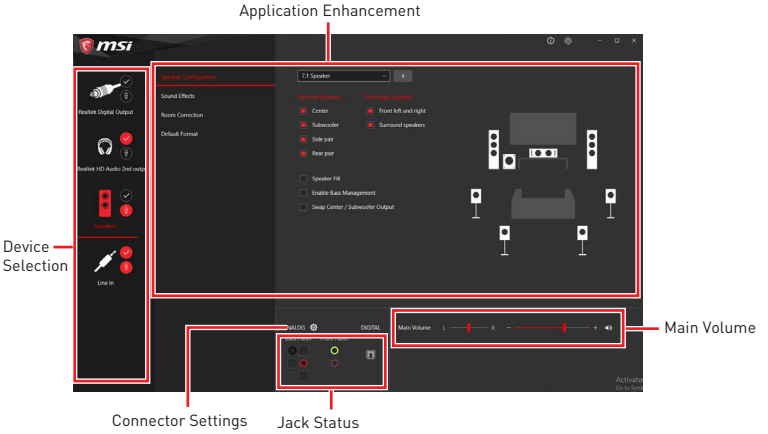

• **Device Selection** - allows you to select a audio output source to change the related options. The **check** sign indicates the devices as default.

• **Application Enhancement** - the array of options will provide you a complete guidance of anticipated sound effect for both output and input device.

• **Main Volume** - controls the volume or balance the right/left side of the speakers that you plugged in front or rear panel by adjust the bar.

• **Jack Status** - depicts all render and capture devices currently connected with your computer.

• **Connector Settings** - configures the connection settings.

Auto popup dialog

When you plug into a device at an audio jack, a dialogue window will pop up asking you which device is current connected.

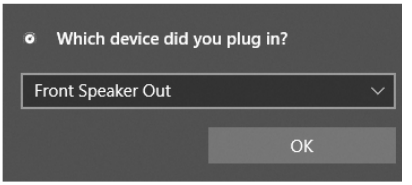

Each jack corresponds to its default setting as shown on the next page.

Important

The pictures above for reference only and may vary from the product you purchased.

Audio jacks to headphone and microphone diagram

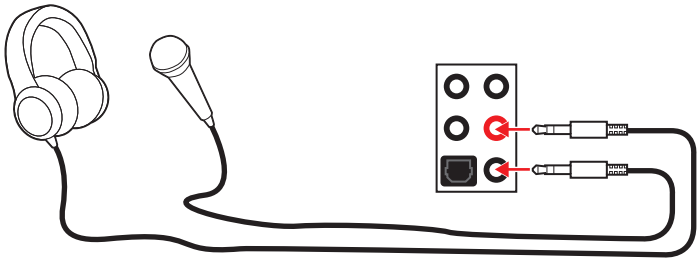

Audio jacks to stereo speakers diagram

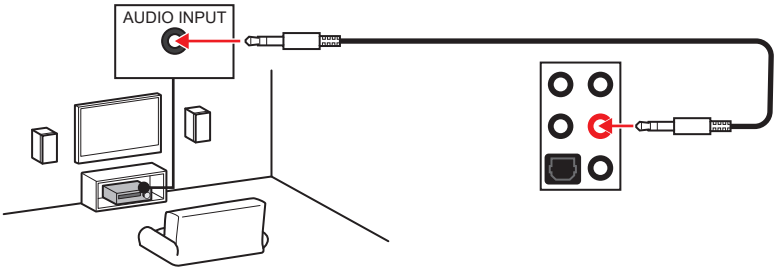

Audio jacks to 7.1-channel speakers diagram

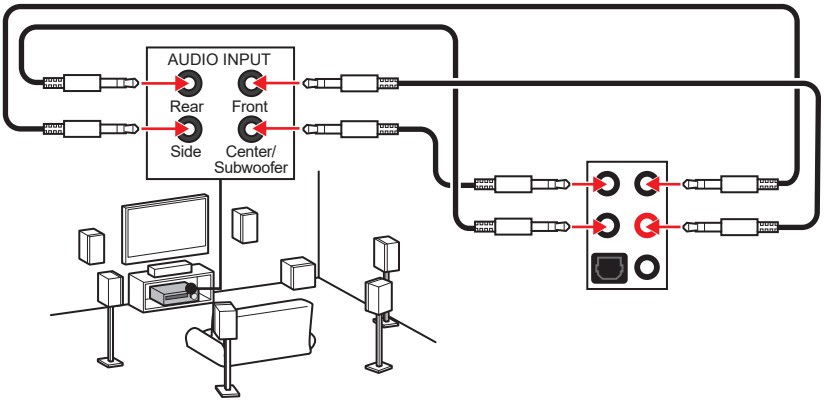

Installing antennas

1. Screw the antennas tight to the antenna connectors as shown below.
2. Orient the antennas.

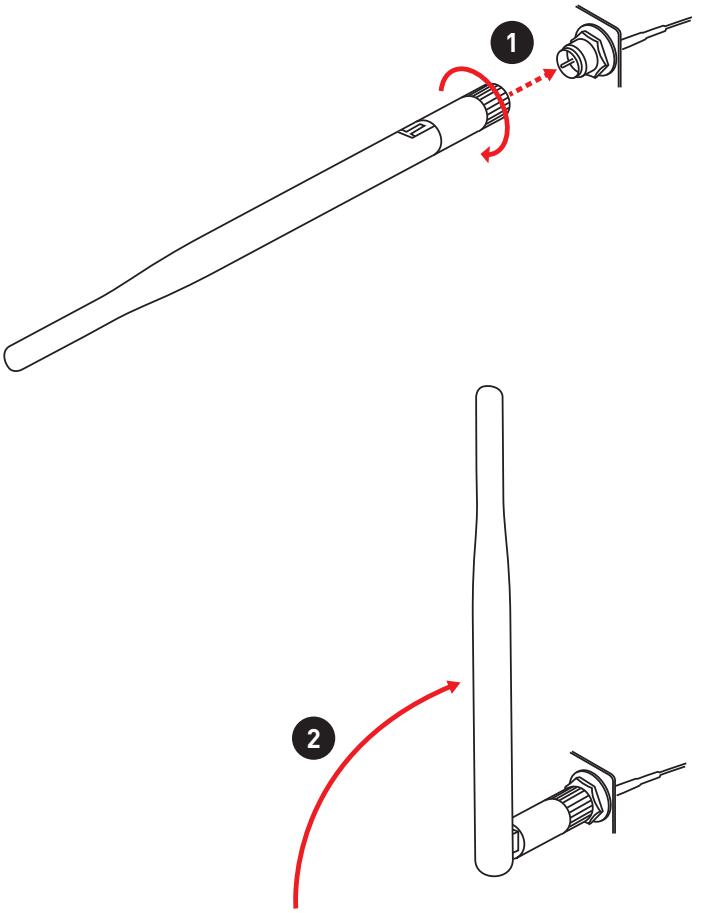

Overview of Components

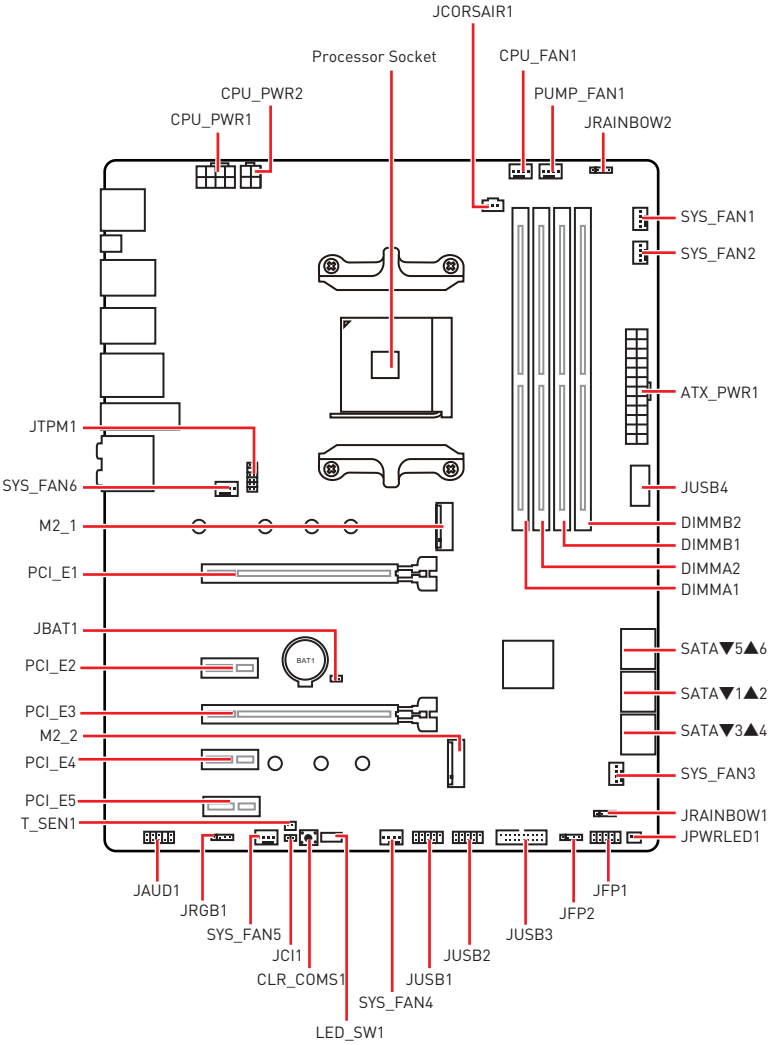

Component Contents

Port Name	Port Type	Page
CLR_COMS1	Clear CMOS (Reset BIOS) Button	40
CPU_FAN1, PUMP_FAN1, SYS_FAN1~6	Fan Connectors	38
CPU_PWR1~2, ATX_PWR1	Power Connectors	35
DIMMA1, DIMMA2, DIMMB1, DIMMB2	DIMM Slots	30
JAUD1	Front Audio Connector	34
JBAT1	Clear CMOS (Reset BIOS) Jumper	40
JCI1	Chassis Intrusion Connector	39
JCORSAIR1	CORSAIR Connector	42
JFP1, JFP2	Front Panel Connectors	34
JPWRLED1	LED power input	44
JRAINBOW1~2	Addressable RGB LED connectors	43
JRGB1	RGB LED connectors	41
JTPM1	TPM Module Connector	37
JUSB1~2	USB 2.0 Connectors	37
JUSB3	USB 3.2 Gen 1 5Gbps Connector	36
JUSB4	USB 3.2 Gen 1 5Gbps Type-C Connector	36
LED_SW1	EZ LED Control	44
M2_1~2	M.2 Slots (Key M)	32
PCI_E1~5	PCIe Expansion Slots	31
Processor Socket	AM4 Socket	29
SATA1~6	SATA 6Gb/s Connectors	32
T_SEN1	Thermal Sensor Connectors	39

Processor Socket

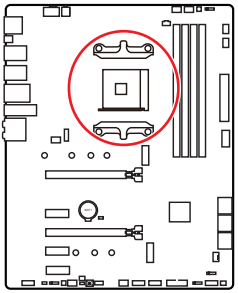

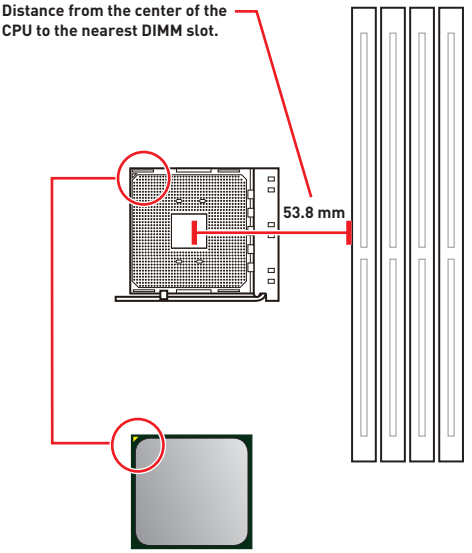

Introduction to the AM4 CPU

The surface of the AM4 CPU has a yellow triangle to assist in correctly lining up the CPU for motherboard placement. The yellow triangle is the Pin 1 indicator.

Important

- *When changing the processor, the system configuration could be cleared and reset BIOS to default values, due to the AM4 processor's architecture.*
- *Always unplug the power cord from the power outlet before installing or removing the CPU.*
- *When installing a CPU, always remember to install a CPU heatsink. A CPU heatsink is necessary to prevent overheating and maintain system stability.*
- *Confirm that the CPU heatsink has formed a tight seal with the CPU before booting your system.*
- *Overheating can seriously damage the CPU and motherboard. Always make sure the cooling fans work properly to protect the CPU from overheating. Be sure to apply an even layer of thermal paste (or thermal tape) between the CPU and the heatsink to enhance heat dissipation.*
- *If you purchased a separate CPU and heatsink/ cooler, Please refer to the documentation in the heatsink/ cooler package for more details about installation.*
- *This motherboard is designed to support overclocking. Before attempting to overclock, please make sure that all other system components can tolerate overclocking. Any attempt to operate beyond product specifications is not recommended. MSI® does not guarantee the damages or risks caused by inadequate operation beyond product specifications.*

DIMM Slots

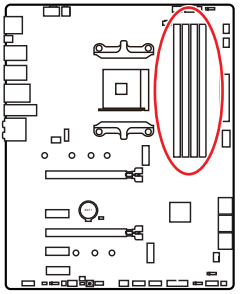

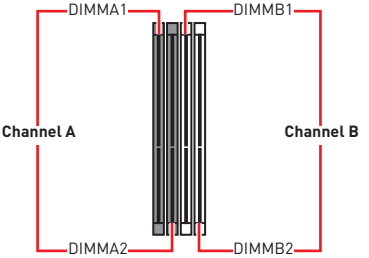

Memory module installation recommendation

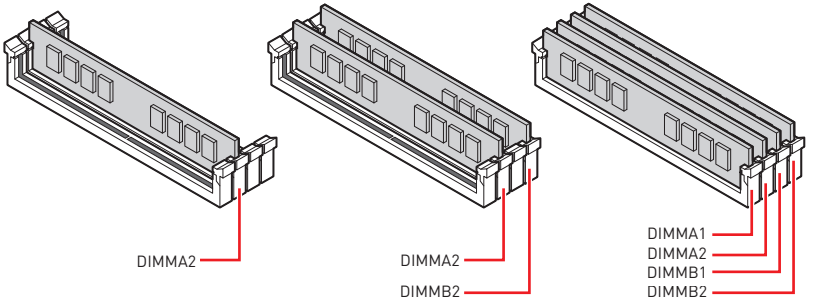

Important

- *Always insert memory modules in the **DIMMA2** slot first.*
- *Due to chipset resource usage, the available capacity of memory will be a little less than the amount of installed.*
- *Based on CPU specification, the Memory DIMM voltage below 1.35V is suggested to protect the CPU.*
- *To ensure system stability for Dual channel mode, memory modules must be of the same type, number and density.*
- *Some memory modules may operate at a lower frequency than the marked value when overclocking due to the memory frequency operates dependent on its Serial Presence Detect (SPD). Go to BIOS and find the **DRAM Frequency** to set the memory frequency if you want to operate the memory at the marked or at a higher frequency.*
- *It is recommended to use a more efficient memory cooling system for full DIMMs installation or overclocking.*
- *The stability and compatibility of installed memory module depend on installed CPU and devices when overclocking.*
- *Please refer www.msi.com for more information on compatible memory.*

PCI_E1~5: PCIe Expansion Slots

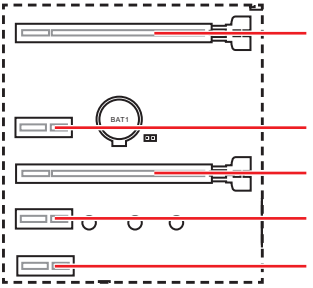

PCI_E1: PCIe 3.0/ 4.0 x16 (CPU)

PCI_E2: PCIe 3.0 x1 (PCH)

PCI_E3: PCIe 3.0 x4 (PCH)

PCI_E4: PCIe 3.0 x1 (PCH)

PCI_E5: PCIe 3.0 x1 (PCH)

Important

- *If you install a large and heavy graphics card, you need to use a tool such as **MSI Gaming Series Graphics Card Bolster** to support its weight to prevent deformation of the slot.*
- *For a single PCIe x16 expansion card installation with optimum performance, using the **PCI_E1** slot is recommended.*
- *When adding or removing expansion cards, always turn off the power supply and unplug the power supply power cable from the power outlet. Read the expansion card's documentation to check for any necessary additional hardware or software changes.*
- *When installing devices in M.2_2, PCI_E2 & PCI_E3 slots at the same time, PCI_E3 slot will be unavailable, and M2_2 slot only supports PCIe x2.*

M.2 slots and PCIe slots combination table

Slot	Combination			
M2_1 (CPU)	PCIe/SATA			
M2_2 (PCH)	PCIe x2	PCIe x4	X	X
PCI_E1 (CPU)	✓	✓	✓	✓
PCI_E2 (PCH)	✓	X	✓	X
PCI_E3 (PCH)	—	X	PCIe x2	PCIe x4
PCI_E4 (PCH)	✓	✓	✓	✓
PCI_E5 (PCH)	✓	✓	✓	✓

(SATA: M.2 SATA SSD, PCIe: M.2 PCIe SSD, X: no device, ✓: available, —: unavailable)

SATA1~6: SATA 6Gb/s Connectors

These connectors are SATA 6Gb/s interface ports. Each connector can connect to one SATA device.

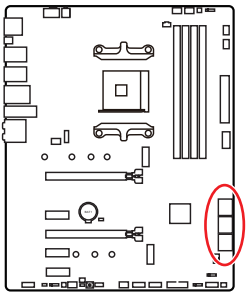

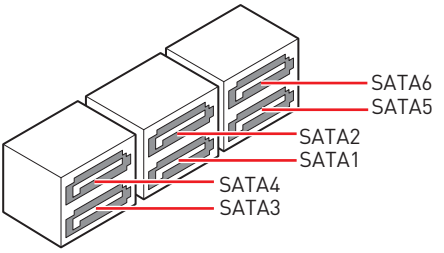

Important

• Please do not fold the SATA cable at a 90-degree angle. Data loss may result during transmission otherwise.

• SATA cables have identical plugs on either sides of the cable. However, it is recommended that the flat connector be connected to the motherboard for space saving purposes.

M2_1~2: M.2 Slots (Key M)

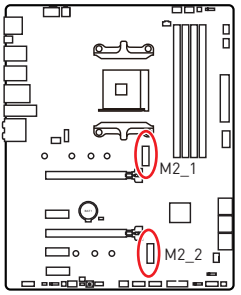

Video Demonstration

Watch the video to learn how to Install M.2 module.

http://youtu.be/JCTFABytrYA

Installing M.2 module

1. Loosen the screws of M.2 SHIELD FROZR heatsink.
2. Remove the M.2 SHIELD FROZR and remove the protective films from the thermal pads.

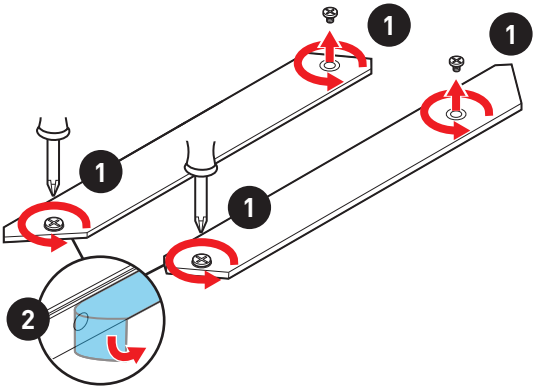

3. Move and fasten the M.2 standoff to the appropriate position for your M.2 SSD, or remove the M.2 standoff if your M.2 SSD length is same as the length of M.2 heatsink to avoid damage to the M.2 SSD.
4. Insert your M.2 SSD into the M.2 slot at a 30-degree angle.
5. Secure the M.2 SSD in place with the M.2 screw, or skip this step if you remove the M.2 standoff in step 3.

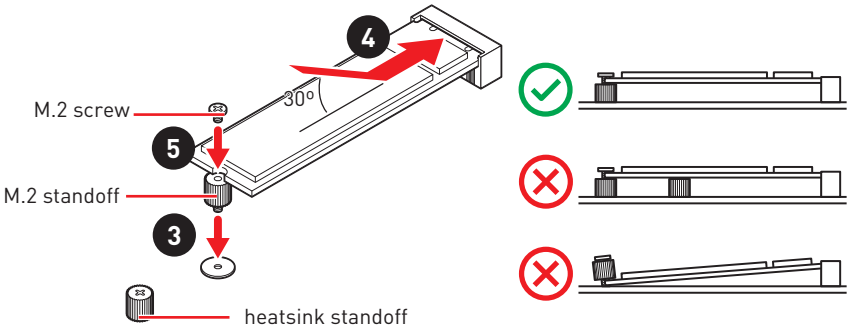

6. Put the M.2 SHIELD FROZR heatsink back in place and secure it.

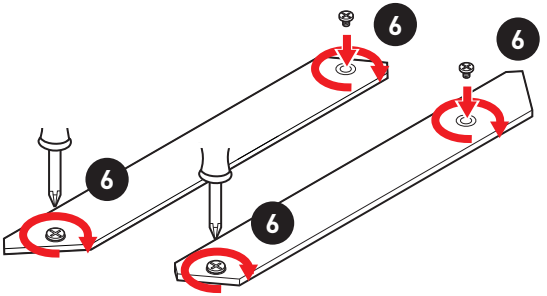

JFP1, JFP2: Front Panel Connectors

These connectors connect to the switches and LEDs on the front panel.

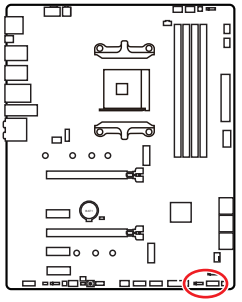

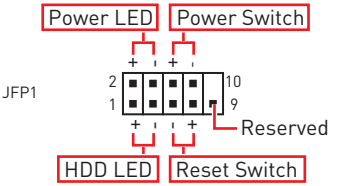

1	HDD LED +	2	Power LED +
3	HDD LED -	4	Power LED -
5	Reset Switch	6	Power Switch
7	Reset Switch	8	Power Switch
9	Reserved	10	No Pin

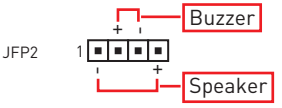

1	Speaker -	2	Buzzer +
3	Buzzer -	4	Speaker +

JAUD1: Front Audio Connector

This connector allows you to connect audio jacks on the front panel.

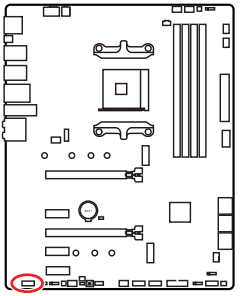

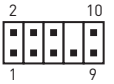

1	MIC L	2	Ground
3	MIC R	4	NC
5	Head Phone R	6	MIC Detection
7	SENSE_SEND	8	No Pin
9	Head Phone L	10	Head Phone Detection

CPU_PWR1~2, ATX_PWR1: Power Connectors

These connectors allow you to connect an ATX power supply.

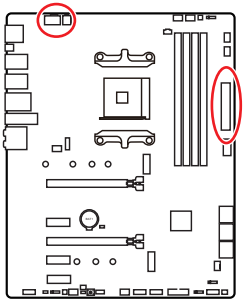



CPU_PWR1

1	Ground	5	+12V
2	Ground	6	+12V
3	Ground	7	+12V
4	Ground	8	+12V



CPU_PWR2

1	Ground	3	+12V
2	Ground	4	+12V

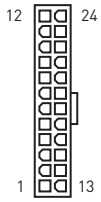

ATX_PWR1

1	+3.3V	13	+3.3V
2	+3.3V	14	-12V
3	Ground	15	Ground
4	+5V	16	PS-ON#
5	Ground	17	Ground
6	+5V	18	Ground
7	Ground	19	Ground
8	PWR OK	20	Res
9	5VSB	21	+5V
10	+12V	22	+5V
11	+12V	23	+5V
12	+3.3V	24	Ground

Important

Make sure that all the power cables are securely connected to a proper ATX power supply to ensure stable operation of the motherboard.

JUSB4: USB 3.2 Gen 1 5Gbps Type-C Connector

This connector allows you to connect USB 3.2 Gen 1 5Gbps Type-C connector on the front panel. The connector possesses a foolproof design. When you connect the cable, be sure to connect it with the corresponding orientation.

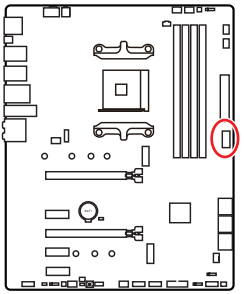

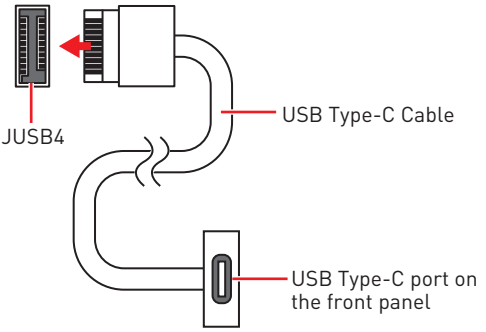

JUSB3: USB 3.2 Gen 1 5Gbps Connector

This connector allows you to connect USB 3.2 Gen 1 5Gbps ports on the front panel.

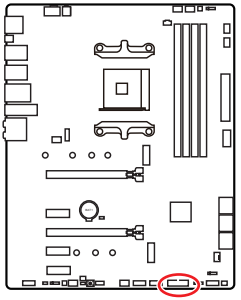

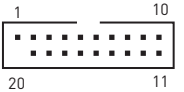

1	Power	11	USB2.0+
2	USB3_RX_DN	12	USB2.0-
3	USB3_RX_DP	13	Ground
4	Ground	14	USB3_TX_C_DP
5	USB3_TX_C_DN	15	USB3_TX_C_DN
6	USB3_TX_C_DP	16	Ground
7	Ground	17	USB3_RX_DP
8	USB2.0-	18	USB3_RX_DN
9	USB2.0+	19	Power
10	Ground	20	No Pin

Important

Note that the Power and Ground pins must be connected correctly to avoid possible damage.

JUSB1~2: USB 2.0 Connectors

These connectors allow you to connect USB 2.0 ports on the front panel.

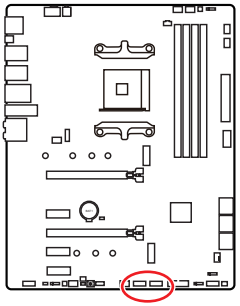

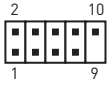

1	VCC	2	VCC
3	USB0-	4	USB1-
5	USB0+	6	USB1+
7	Ground	8	Ground
9	No Pin	10	NC

Important

- *Note that the VCC and Ground pins must be connected correctly to avoid possible damage.*
- *In order to recharge your iPad,iPhone and iPod through USB ports, please install MSI® DRAGON CENTER utility.*

JTPM1: TPM Module Connector

This connector is for TPM (Trusted Platform Module). Please refer to the TPM security platform manual for more details and usages.

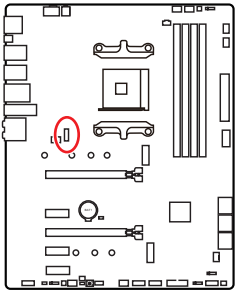

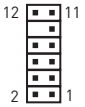

1	SPI Power	2	SPI Chip Select
3	Master In Slave Out (SPI Data)	4	Master In Slave In (SPI Data)
5	Reserved	6	SPI Clock
7	Ground	8	SPI Reset
9	Reserved	10	No Pin
11	Reserved	12	Interrupt Request

CPU_FAN1, PUMP_FAN1, SYS_FAN1~6: Fan Connectors

Fan connectors can be classified as PWM (Pulse Width Modulation) Mode or DC Mode. PWM Mode fan connectors provide constant 12V output and adjust fan speed with speed control signal. DC Mode fan connectors control fan speed by changing voltage. The auto mode fan connectors can automatically detect PWM and DC mode. However, you can follow the instruction below to adjust the fan connector to PWM or DC Mode manually.

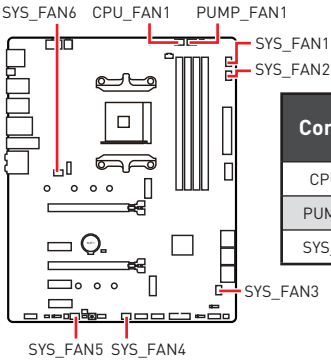

Connector	Default fan mode	Max. current	Max. power
CPU_FAN1	Auto mode	2A	24W
PUMP_FAN1	PWM mode	3A	36W
SYS_FAN1~6	DC mode	1A	12W

Switching fan mode and adjusting fan speed

You can switch between PWM mode and DC mode and adjust fan speed in **BIOS > HARDWARE MONITOR**.

Select **PWM** mode or **DC** mode

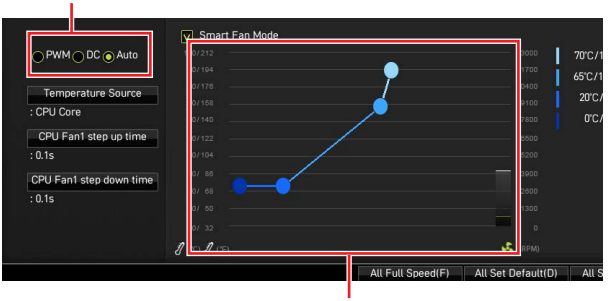

There are gradient points of the fan speed that allow you to adjust fan speed in relation to CPU temperature.

Important

Make sure fans are working properly after switching the PWM/ DC mode.

Pin definition of fan connectors

1 PWM Mode pin definition			
1	Ground	2	+12V
3	Sense	4	Speed Control Signal

1 DC Mode pin definition			
1	Ground	2	Voltage Control
3	Sense	4	NC

JCI1: Chassis Intrusion Connector

This connector allows you to connect the chassis intrusion switch cable.

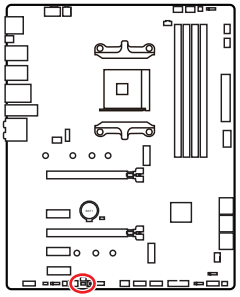



Normal (default)



Trigger the chassis intrusion event

Using chassis intrusion detector

1. Connect the **JCI1** connector to the chassis intrusion switch/ sensor on the chassis.
2. Close the chassis cover.
3. Go to **BIOS > SETTINGS > Security > Chassis Intrusion Configuration**.
4. Set **Chassis Intrusion** to **Enabled**.
5. Press **F10** to save and exit and then press the **Enter** key to select **Yes**.
6. Once the chassis cover is opened again, a warning message will be displayed on screen when the computer is turned on.

Resetting the chassis intrusion warning

1. Go to **BIOS > SETTINGS > Security > Chassis Intrusion Configuration**.
2. Set **Chassis Intrusion** to **Reset**.
3. Press **F10** to save and exit and then press the **Enter** key to select **Yes**.

T_SEN1: Thermal Sensor Connectors

This connector allows you to connect the thermistor cable and use it to monitor the temperature of the detection point.

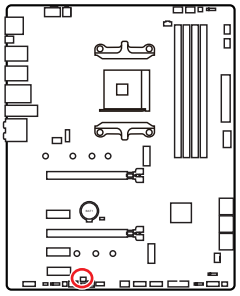

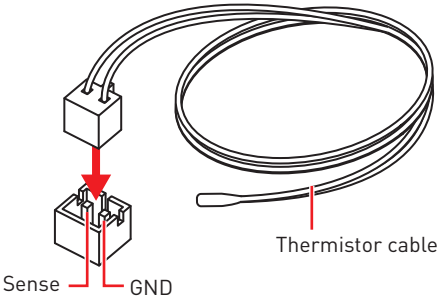

JBAT1: Clear CMOS (Reset BIOS) Jumper

There is CMOS memory onboard that is external powered from a battery located on the motherboard to save system configuration data. If you want to clear the system configuration, set the jumpers to clear the CMOS memory.

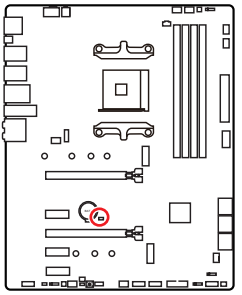



Keep Data
(default)



Clear CMOS/
Reset BIOS

Resetting BIOS to default values

1. Power off the computer and unplug the power cord.
2. Use a jumper cap to short **JBAT1** for about 5-10 seconds.
3. Remove the jumper cap from **JBAT1**.
4. Plug the power cord and Power on the computer.

CLR_COMS1: Clear CMOS (Reset BIOS) Button

There is CMOS memory onboard that is external powered from a battery located on the motherboard to save system configuration data. If you want to clear the system configuration, press the button to clear the CMOS memory.

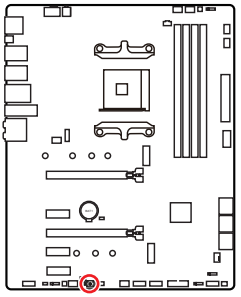



Press the button to
clear CMOS memory

Resetting BIOS to default values

1. Power off the computer and unplug the power cord.
2. Press **CLR_COMS1** button for about 5-10 seconds.
3. Plug the power cord and Power on the computer.

JRGB1: RGB LED connectors

The JRGB connector allows you to connect the 5050 RGB LED strips 12V.

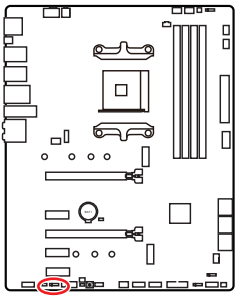

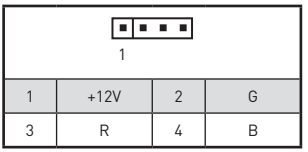

RGB LED Strip Connection

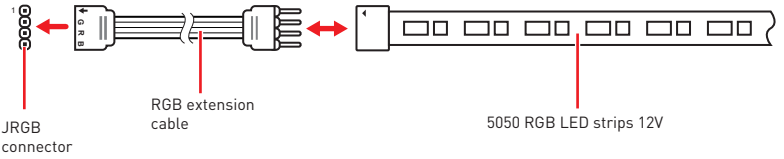

RGB LED Fan Connection

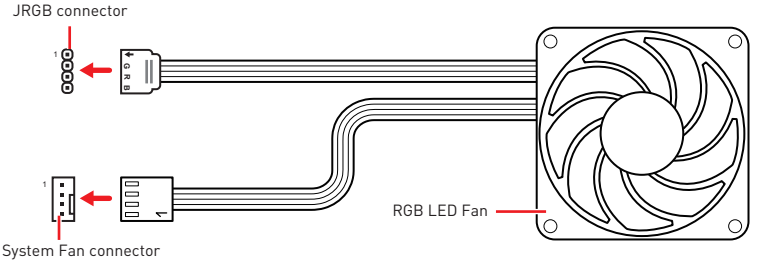

Important

- *The JRGB connector supports up to 2 meters continuous 5050 RGB LED strips (12V/G/R/B) with the maximum power rating of 3A (12V).*
- *Always turn off the power supply and unplug the power cord from the power outlet before installing or removing the RGB LED strip.*
- *Please use MSI's software to control the extended LED strip.*

JCORSAIR1: CORSAIR Connector

The JCORSAIR1 connector allows you to connect the CORSAIR Individually Addressable RGB LED strips 5V or CORSAIR RGB LED fans with the CORSAIR fan hub. Once all items are connected properly, you can control the CORSAIR RGB LED strips and fans with MSI's software.

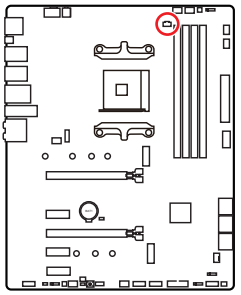

JCORSAIR1

1	+5V	2	Data
3	Ground		

CORSAIR RGB LED Fan Connection

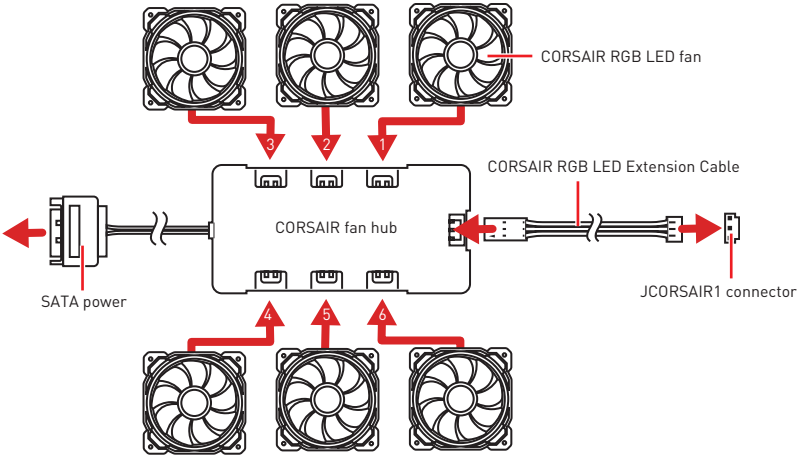

CORSAIR Lighting Node PRO Connection

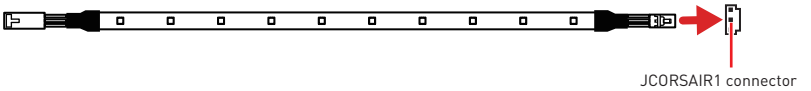

Important

- *Fans must start at 1 and continue in series. 1 > 2 > 3 > 4 > 5 > 6. Any fan not connected in series will break communication and the RGB LED lighting function will not work.*
- *Quantity of RGB LED Fans or RGB LED Lighting PRO strips supported may differ between models. Please refer to the motherboard specification.*
- *CORSAIR RGB LED Fan and CORSAIR Lighting Node PRO can't be used at the same time.*

JRAINBOW1~2: Addressable RGB LED connectors

The JRAINBOW connectors allow you to connect the WS2812B Individually Addressable RGB LED strips 5V.

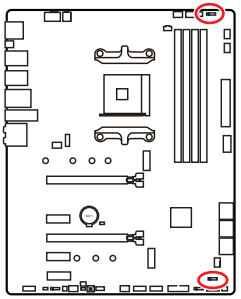

1			
1	+5V	2	Data
3	No Pin	4	Ground

Addressable RGB LED Strip Connection

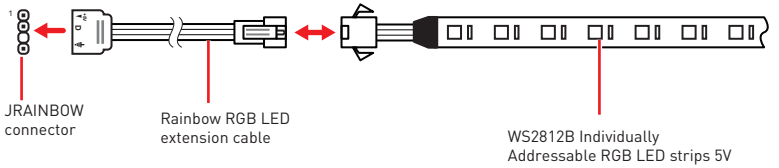

Addressable RGB LED Fan Connection

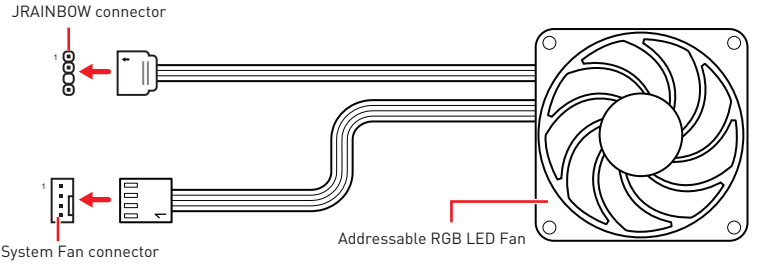

CAUTION

Do not connect the wrong type of LED strips. The JRGB connector and the JRAINBOW connector provide different voltages, and connecting the 5V LED strip to the JRGB connector will result in damage to the LED strip.

Important

- *The JRAINBOW connector supports up to 75 LEDs WS2812B Individually Addressable RGB LED strips (5V/Data/Ground) with the maximum power rating of 3A (5V). In the case of 20% brightness, the connector supports up to 200 LEDs.*
- *Always turn off the power supply and unplug the power cord from the power outlet before installing or removing the RGB LED strip.*
- *Please use MSI's software to control the extended LED strip.*

EZ Debug LED

These LEDs indicate the debug status of the motherboard.

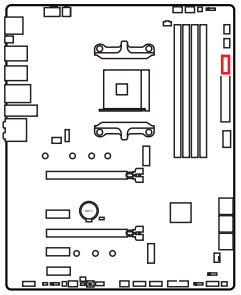

- **CPU** - indicates CPU is not detected or fail.
- **DRAM** - indicates DRAM is not detected or fail.
- **VGA** - indicates GPU/ PCIE/ M.2 device is not detected or fail.
- **BOOT** - indicates the booting device is not detected or fail.

LED_SW1: EZ LED Control

This switch is used to switch on/ off all the LEDs of motherboard.

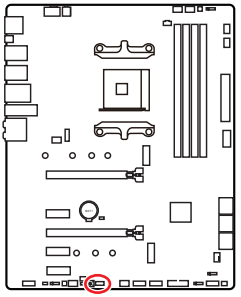

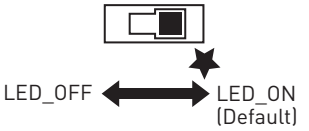

JPWRLED1: LED power input

This connector is used by retailers to demonstrate onboard LED lights.

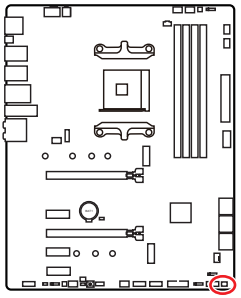

JPWRLED1 - LED power input

Installing OS, Drivers & Utilities

Please download and update the latest utilities and drivers at www.msi.com

Installing Windows® 10

1. Power on the computer.
2. Insert the Windows® 10 installation disc/USB into your computer.
3. Press the **Restart** button on the computer case.
4. Press **F11** key during the computer POST (Power-On Self Test) to get into Boot Menu.
5. Select the Windows® 10 installation disc/USB from the Boot Menu.
6. Press any key when screen shows **Press any key to boot from CD or DVD...** message.
7. Follow the instructions on the screen to install Windows® 10.

Installing Drivers

1. Start up your computer in Windows® 10.
2. Insert MSI® Drive Disc into your optical drive.
3. Click the **Select to choose what happens with this disc** pop-up notification, then select **Run DVDSetup.exe** to open the installer. If you turn off the AutoPlay feature from the Windows Control Panel, you can still manually execute the **DVDSetup.exe** from the root path of the MSI Drive Disc.
4. The installer will find and list all necessary drivers in the **Drivers/Software** tab.
5. Click the **Install** button in the lower-right corner of the window.
6. The drivers installation will then be in progress, after it has finished it will prompt you to restart.
7. Click **OK** button to finish.
8. Restart your computer.

Installing Utilities

Before you install utilities, you must complete drivers installation.

1. Open the installer as described above.
2. Click the **Utilities** tab.
3. Select the utilities you want to install.
4. Click the **Install** button in the lower-right corner of the window.
5. The utilities installation will then be in progress, after it has finished it will prompt you to restart.
6. Click **OK** button to finish.
7. Restart your computer.

UEFI BIOS

MSI UEFI BIOS is compatible with UEFI (Unified Extensible Firmware Interface) architecture. UEFI has many new functions and advantages that traditional BIOS cannot achieve, and it will completely replace BIOS in the future. The MSI UEFI BIOS uses UEFI as the default boot mode to take full advantage of the new chipset's capabilities. However, it still has a CSM (Compatibility Support Module) mode to be compatible with older devices. That allows you to replace legacy devices with UEFI compatible devices during the transition.

Important

The term BIOS in this user guide refers to UEFI BIOS unless otherwise noted.

UEFI advantages

• Fast booting - UEFI can directly boot the operating system and save the BIOS self-test process. And also eliminates the time to switch to CSM mode during POST.

• Supports for hard drive partitions larger than 2 TB.

• Supports more than 4 primary partitions with a GUID Partition Table (GPT).

• Supports unlimited number of partitions.

• Supports full capabilities of new devices - new devices may not provide backward compatibility.

• Supports secure startup - UEFI can check the validity of the operating system to ensure that no malware tampers with the startup process.

Incompatible UEFI cases

• **32-bit Windows operating system** - this motherboard supports only Windows 10 64-bit operating system.

• **Older graphics card** - the system will detect your graphics card. When display a warning message **There is no GOP (Graphics Output protocol) support detected in this graphics card**.

Important

We recommend that you to use a GOP/ UEFI compatible graphics card.

How to check the BIOS mode?

After entering the BIOS, find the BIOS Mode at the top of the screen.

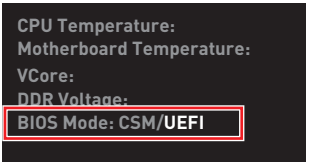

UEFI boot mode

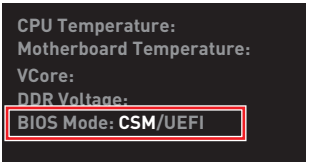

CSM boot mode

BIOS Setup

The default settings offer the optimal performance for system stability in normal conditions. You should **always keep the default settings** to avoid possible system damage or failure booting unless you are familiar with BIOS.

Important

- *BIOS items are continuously update for better system performance. Therefore, the description may be slightly different from the latest BIOS and should be for reference only. You could also refer to the **HELP** information panel for BIOS item description.*
- *The pictures in this chapter are for reference only and may vary from the product you purchased.*
- *The BIOS items will vary with the processor.*

Entering BIOS Setup

Press **Delete** key, when the **Press DEL key to enter Setup Menu, F11 to enter Boot Menu** message appears on the screen during the boot process.

Function key

F1: General Help list

F2: Add/ Remove a favorite item

F3: Enter Favorites menu

F4: Enter CPU Specifications menu

F5: Enter Memory-Z menu

F6: Load optimized defaults

F7: Switch between Advanced mode and EZ mode

F8: Load Overclocking Profile

F9: Save Overclocking Profile

F10: Save Change and Reset*

F12: Take a screenshot and save it to USB flash drive (FAT/ FAT32 format only).

Ctrl+F: Enter Search page

* When you press F10, a confirmation window appears and it provides the modification information. Select between Yes or No to confirm your choice.

Resetting BIOS

You might need to restore the default BIOS setting to solve certain problems. There are several ways to reset BIOS:

- Go to BIOS and press **F6** to load optimized defaults.
- Short the **Clear CMOS** jumper on the motherboard.
- Press the **Clear CMOS** button on the motherboard.

Important

*Be sure the computer is off before clearing CMOS data. Please refer to the **Clear CMOS** jumper section for resetting BIOS.*

Updating BIOS

Updating BIOS with M-FLASH

Before updating:

Please download the latest BIOS file that matches your motherboard model from MSI website. And then save the BIOS file into the USB flash drive.

Updating BIOS:

1. Insert the USB flash drive that contains the update file into the USB port.
2. Please refer the following methods to enter flash mode.
   - Reboot and press **Ctrl + F5** key during POST and click on **Yes** to reboot the system.



   - Reboot and press **Del** key during POST to enter BIOS. Click the **M-FLASH** button and click on **Yes** to reboot the system.



3. Select a BIOS file to perform the BIOS update process.
4. When prompted click on Yes to start recovering BIOS.
5. After the flashing process is 100% completed, the system will reboot automatically.

Updating the BIOS with MSI DRAGON CENTER

Before updating:

Make sure the LAN driver is already installed and the internet connection is set properly.

Updating BIOS:

1. Install and launch MSI DRAGON CENTER and go to **Support** page.
2. Select **Live Update** and click on Advance button.

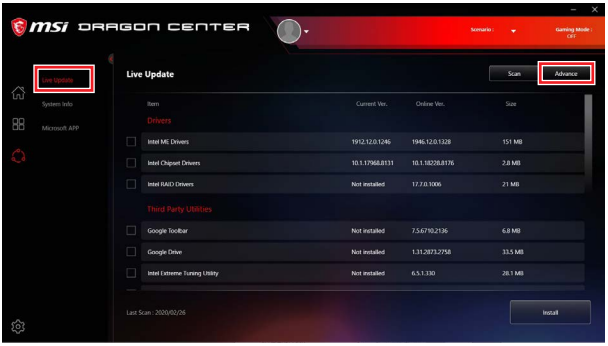

3. Click on **Scan** button to search the latest BIOS file.
4. Select the BIOS file and click on **Download** icon to download and install the latest BIOS file.
5. Click **Next** and choose **In Windows mode**. And then click **Next** and **Start** to start updating BIOS.
6. After the flashing process is 100% completed, the system will restart automatically.

Updating BIOS with Flash BIOS Button

1. Please download the latest BIOS file that matches your motherboard model from the MSI® website.
2. Rename the BIOS file to **MSI.ROM**, and save it to the root of your USB flash drive.
3. Connect the power supply to **CPU_PWR1** and **ATX_PWR1**. (No need to install CPU and memory.)
4. Plug the USB flash drive that contains the MSI.ROM file into the **Flash BIOS Port** on the rear I/O panel.
5. Press the **Flash BIOS** Button to flash BIOS, and the LED starts flashing.
6. The LED will be turned off when the process is completed.

EZ Mode

At EZ mode, it provides the basic system information and allows you to configure the basic setting. To configure the advanced BIOS settings, please enter the Advanced Mode by pressing the **Setup Mode switch** or **F7** function key.

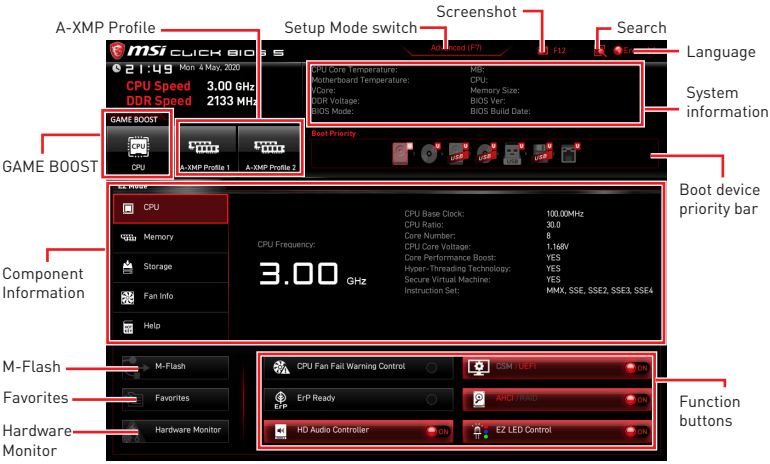

• **GAME BOOST** - click on it to toggle the GAME BOOST for overclocking. This function is only available when both of the motherboard and CPU are supporting this function.

Important

*We don't recommend you to adjust any BIOS item after activating the **GAME BOOST** function for keeping the optimal performance and system stability.*

• **A-XMP Profile** - allows you to select the A-XMP profile for memory to overclock. This function is only available when the system, memory and CPU are supporting this function.

• **Setup Mode switch** - press this tab or the **F7** key to switch between Advanced mode and EZ mode.

• **Screenshot** - click on this tab or the **F12** key to take a screenshot and save it to USB flash drive (FAT/ FAT32 format only).

• **Search** - click on this tab or the **Ctrl+F** keys to enter the search page. It allows you to search by BIOS item name. Move the mouse over a blank space and right click the mouse to exit the search page.

Important

In search page, only the F6, F10 and F12 function keys are available.

• **Language** - allows you to select language of BIOS setup.

• **System information** - shows the CPU/ DDR speed, CPU/ MB temperature, MB/ CPU type, memory size, CPU/ DDR voltage, BIOS version and build date.

• **Boot device priority bar** - you can move the device icons to change the boot priority. The boot priority from high to low is left to right.

• **Component Information** - click on the **CPU**, **Memory**, **Storage**, **Fan Info** and **Help** buttons to show the information of connected component.

• **Function buttons** - enable or disable these functions by clicking on these buttons. The function is enabled when the button shows **ON** .

Important

The function buttons will vary with the motherboard you purchased.

• **M-Flash** - click on this button to enter the **M-Flash** menu that provides the way to update BIOS with a USB flash drive.

• **Hardware Monitor** - click on this button to enter the **Hardware Monitor** menu that allows you to manually control the fan speed by percentage.

• **Favorites** - click on this button or press the **F3** key to show the **Favorites** window. It provides 5 menus for you to create personal BIOS menu where you can save and access favorite/ frequently-used BIOS setting items.



- **To add a BIOS item to a favorite menu**

1. Select a BIOS item not only on BIOS menu but also on search page.
2. Right-click or press **F2** key.
3. Choose a favorite page and click on **OK.**

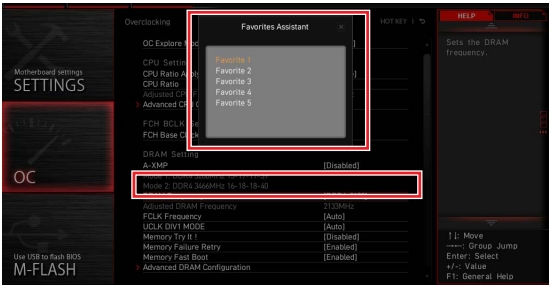

- **To delete a BIOS item from favorite menu**

1. Select a BIOS item on favorite menu.
2. Right-click or press **F2** key.
3. Choose **Delete** and click on **OK**.

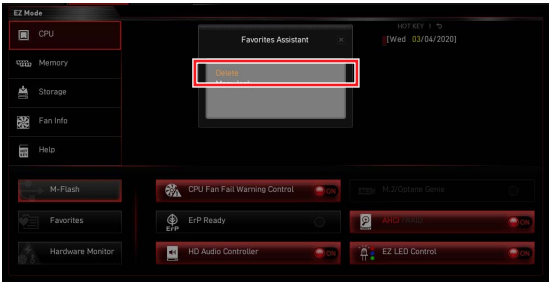

Advanced Mode

Press **Setup Mode switch** or **F7** function key can switch between EZ Mode and Advanced Mode in BIOS setup.

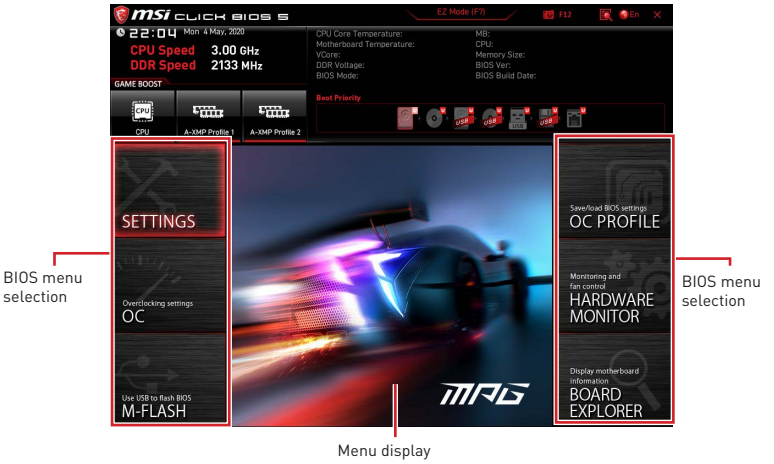

- **BIOS menu selection** - the following options are available:
  - **SETTINGS** - allows you to specify the parameters for chipset and boot devices.
  - **OC** - allows you to adjust the frequency and voltage. Increasing the frequency may get better performance.
  - **M-FLASH** - provides the way to update BIOS with a USB flash drive.
  - **OC PROFILE** - allows you to manage overclocking profiles.
  - **HARDWARE MONITOR** - allows you to set the speeds of fans and monitor voltages of system.
  - **BOARD EXPLORER** - provides the information of installed devices on this motherboard.
- **Menu display** - provides BIOS setting items and information to be configured.

SETTINGS Menu

This menu allows you to specify the parameters for system, chipset and boot devices.

▶ System Status sub-menu

The System Status sub-menu allows you to set the system clock and view system information.

▶ System Date

Sets the system date. Use tab key to switch between date elements.

The format is <day> <month> <date> <year>.

<day>	Day of the week, from Sun to Sat, determined by BIOS. Read-only.
<month>	The month from Jan. through Dec.
<date>	The date from 1 to 31 can be keyed by numeric function keys.
<year>	The year can be adjusted by users.

▶ System Time

Sets the system time. Use tab key to switch between time elements.

The time format is <hour> <minute> <second>.

▶ SATA PortX/ M2_X

Shows the information of connected SATA/ M.2 device.

Important

If the connected SATA/ M.2 device is not displayed, turn off computer and re-check SATA/ M.2 cable and power cable connections of the device and motherboard.

▶ System Information

Shows detailed system information, including CPU type, BIOS version, and Memory (read only).

▶ DMI Information

Shows system information, desktop board information and chassis information.

▶ Advanced sub-menu

The Advanced sub-menu allows you to adjust and set the parameters and behaviors of PCIe, ACPI, integrated peripherals, integrated graphics, USB, power management and Windows .

▶ PCI Subsystem Settings

Sets PCI, PCI express interface protocol and latency timer. Press **Enter** to enter the sub-menu.

▶ ACPI Settings

Sets ACPI parameters of onboard power LED behaviors.

▶ Integrated Peripherals sub-menu

Sets integrated peripherals' parameters, such as LAN, Wi-Fi, HDD, SSD, USB and audio.

▶ **Integrated Graphics Configuration sub-menu (optional)**

Adjusts integrated graphics settings for optimum system. This sub-menu is only available when using the CPU which integrate with IGP.

▶ **USB Configuration sub-menu**

Sets the onboard USB controller and device function. Press **Enter** to enter the sub-menu.

▶ **Power Management Setup sub-menu**

Sets system Power Management of ErP and AC Power Loss behaviors. You can optimize the system power consumption in this menu.

▶ **Windows OS Configuration**

Sets Windows detailed configuration and behaviors. You also can set the secure boot and control key management to prevent the unauthorized accessing for system.

▶ **Wake Up Event Setup sub-menu**

Sets system wake up behaviors for different sleep modes.

▶ **Secure Erase+**

Enables or disables Secure Erase+ function. **Secure Erase+** is the best way to effectively wipe all data from a SSD. Please note that data of SSD will be erased after enabling **Secure Erase+**.

▶ **NVMe SSD Self-Test**

Enables or disables the NVMe SSD self-test function to ensure it is functioning properly. Only the NVMe 1.3 or above SSD can support this function.

▶ **Realtek PCIe GbE Family Controller (MAC sub-menu**

This sub-menu shows driver information and configuration of the Ethernet controller parameter.

▶ **Boot sub-menu**

Use this menu to set the system boot states and the sequence of system boot devices.

▶ **Security sub-menu**

Use this menu to set the administrator password and the user password for system security. This menu also allows you to set the TPM (Trusted Platform Module) function.

Important

*When selecting the Administrator / User Password items, a password box will appear on the screen. Type the password then press **Enter**. The password typed now will replace any previous set password from CMOS memory. You will be prompted to confirm the password. You may also press **Esc** key to abort the selection.*

*To clear a set password, press **Enter** when you are prompted to enter a new password. A message will confirm the password is being disabled. Once the password is disabled, you can enter the setup and OS without authorization.*

▶ **Save & Exit**

This menu allows you to load the BIOS default values or factory default settings into the BIOS and exit the BIOS setup utility with or without changes.

OC Menu

This menu allows you to configure the frequencies and voltages for overclocking. Please note that, higher frequency and voltage may benefit overclocking capability but cause system un-stability.

Important

- *Overclocking your PC manually is only recommended for advanced users.*
- *Overclocking is not guaranteed, and if done improperly, it could void your warranty or severely damage your hardware.*
- *If you are unfamiliar with overclocking, we advise you to use **GAME BOOST** function for easy overclocking.*
- *The BIOS items in OC menu will vary with the processor.*

▶ OC Explore Mode [Normal]

Enables or disables to show the normal or expert version of OC settings.

[Normal]	Provides the regular OC settings in BIOS setup.
[Expert]	Provides the advanced OC settings for OC expert to configure in BIOS setup.

Note: We use * as the symbol for the OC settings of Expert mode.

▶ CPU Ratio Apply Mode [All Core]

Sets applied mode for CPU ratio. This item only appears when a CPU that supports **Turbo Boost** is installed.

▶ CPU Ratio [Auto]

Sets the CPU ratio that is used to determine CPU clock speed. This item can only be changed if the processor supports this function.

▶ Advanced CPU Configuration

Press **Enter** to enter the sub-menu. User can set the parameters about CPU power/ current. The system may become unstable or unbootable after changing the parameters. If it occurs, please clear the CMOS data and restore the default settings.

▶ FCH Base Clock(MHz)

This option allows you to set base clock for the Fusion Controller Hub (FCH) . If set to Auto, the BIOS will automatically set the clock or you can set it manually.

▶ A-XMP [Disabled]

Please enable A-XMP or select a profile of memory module for overclocking the memory. This item will be available when the installed processor, memory modules and motherboard support this function.

▶ DRAM Frequency [Auto]

Sets the DRAM frequency. Please note the overclocking behavior is not guaranteed.

▶ Adjusted DRAM Frequency

Shows the adjusted DRAM frequency. Read-only.

▶ FCLK Frequency [Auto]

Sets the FCLK frequency (Internal Data Fabric clock of DRAM). Please note the overclocking behavior is not guaranteed.

▶ UCLK DIV1 Mode [Auto]

Sets UCLK (Internal memory controller clock) mode.

▶ Memory Try It ! [Disabled]

It can improve memory compatibility or performance by choosing optimized memory preset. This item will be available when the installed processor supports this function.

▶ Memory Failure Retry [Enabled]

Enables or disables the system reboot function when the memory OC retry fails.

▶ Memory Fast Boot [Enabled]

Enables or disables the initiation and training for memory every booting.

▶ Advanced DRAM Configuration

Press **Enter** to enter the sub-menu. User can set the memory timing for each/ all memory channel. The system may become unstable or unbootable after changing memory timing. If it occurs, please clear the CMOS data and restore the default settings. (Refer to the Clear CMOS jumper section to clear the CMOS data, and enter the BIOS to load the default settings.)

▶ DigitALL Power sub-menu

Press **Enter** to enter the sub-menu. In the sub-menu, you can setup some protecting conditions about voltage/ current/ temputure for CPU.

▶ CPU Voltages control [Auto]

These options allows you to set the voltages related to CPU. If set to **Auto**, BIOS will set these voltages automatically or you can set it manually.

▶ DRAM Voltages control [Auto]

These options allows you to set the voltages related to memory. If set to **Auto**, BIOS will set these voltages automatically or you can set it manually.

▶ Memory Changed Detect [Enabled]*

Enables or disables the system to issue a warning message during boot when the memory has been replaced.

[Enabled] The system will issue a warning message during boot and then you have to load the default settings for new devices.

[Disabled] Disables this function and keeps the current BIOS settings.

▶ CPU Specifications sub-menu

Press **Enter** to enter the sub-menu. This sub-menu displays the information of installed CPU. You can also access this information menu at any time by pressing [F4]. Read only.

▶ MEMORY-Z sub-menu

Press **Enter** to enter the sub-menu. This sub-menu displays all the settings and timings of installed memory. You can also access this information menu at any time by pressing [F5].

M-FLASH Menu

M-FLASH provides the way to update BIOS with a USB flash drive. Please download the latest BIOS file that matches your motherboard model from MSI website, save the BIOS file into your USB flash drive. And then follow the steps below to update BIOS.

1. Insert the USB flash drive that contains the update file into the computer.
2. Click on **M-FLASH** tab, a demand message will be prompted. Click on **Yes** to reboot and enter the flash mode.



3. The system will enter the flash mode and a file selection menu will appear after rebooting.

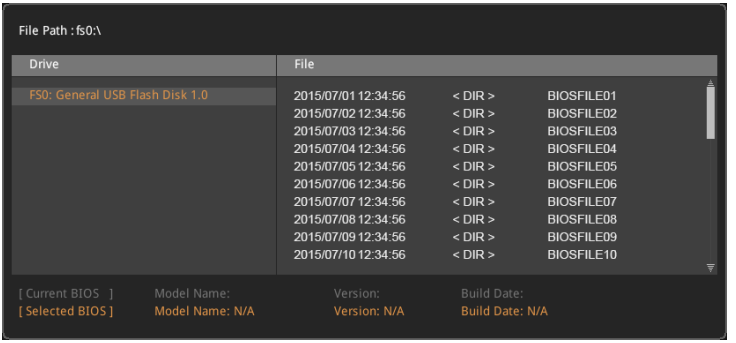

4. Select a BIOS file to perform the BIOS update process.
5. After the flashing process is 100% completed, the system will reboot automatically.

OC PROFILE Menu



▶ Overclocking Profile 1/ 2/ 3/ 4/ 5/ 6

Overclocking Profile 1/ 2/ 3/ 4/ 5/ 6 management. Press **Enter** to enter the sub-menu.

▶ Set Name for Overclocking Profile 1/ 2/ 3/ 4/ 5/ 6

Name the current overclocking profile.

▶ Save Overclocking Profile 1/ 2/ 3/ 4/ 5/ 6

Save the current overclocking profile.

▶ Load Overclocking Profile 1/ 2/ 3/ 4/ 5/ 6

Load the current overclocking profile.

▶ Clear Overclocking Profile 1/ 2/ 3/ 4/ 5/ 6

Clear the current overclocking profile.

▶ OC Profile Load from ROM

Load OC profile from BIOS ROM.

▶ OC Profile Save to USB

Save OC profile to the USB flash drive. The USB flash drive should be FAT/ FAT32 format only.

▶ OC Profile Load from USB

Load OC profile from the USB flash drive. The USB flash drive should be FAT/ FAT32 format only.

HARDWARE MONITOR Menu

This menu allows you to adjust the fan speed manually and monitor CPU/ system voltage.

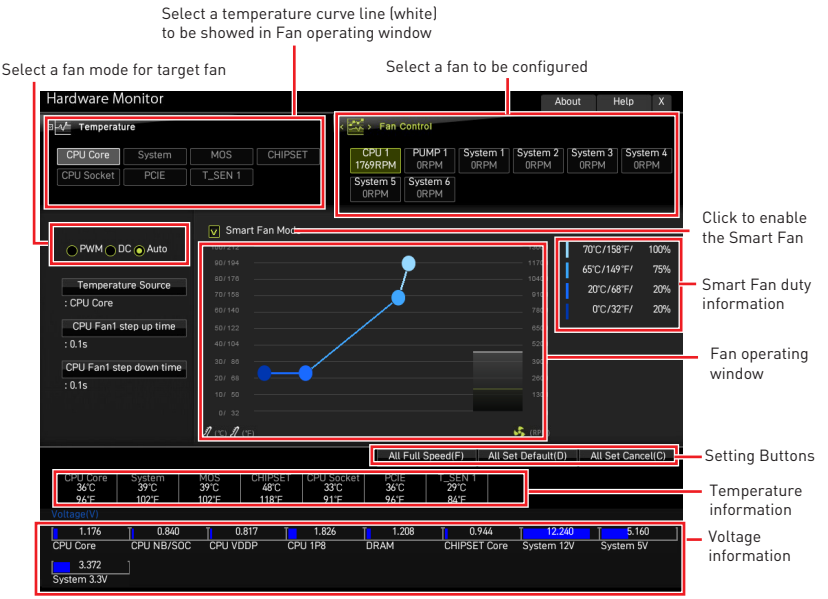

• **Smart Fan** - This setting enables/disables the Smart Fan function. Smart Fan is an excellent feature which will adjust the CPU/system fan speed automatically depending on the current CPU/system temperature, avoiding the overheating to damage your system.

▶ **Settings Buttons**

- **All Full Speed** - configures all fans to run at full operating speed.
- **All Set Default** - configures all fans' speeds return the BIOS default values.
- **All Set Cancel** - discards current changes and restores previous settings for all fan .

Important

Make sure fans are working properly after adjusting the fan speed and switching the fan mode.

Adjusting fans

1. Selects a fan that you want to adjust and to display the fan duty curve line (yellow) in fan operating windows.
2. Click and drag the duty points to adjust the fan speed.



Important

The pictures in this section are for reference only and may vary from the motherboard you purchased.

AMD RAID Configuration

The following are the RAID levels supported by RAIDXpert2.

RAID 0 (Striping) breaks the data into blocks which are written to separate hard drives. Spreading the hard drive I/O load across independent channels greatly improves I/O performance.

RAID 1 (Mirroring) provides data redundancy by mirroring data between the hard drives and provides enhanced read performance.

RAID 10 (Striped RAID1 Sets) uses four hard drives to create a combination of RAID 0 and 1 by forming a RAID 0 array from two RAID 1 arrays.

Volume (JBOD) provides the ability to link-together storage from one or several disks, regardless of the size of the space on those disks. Useful in scavenging space on disks unused by other disks in the array. Does not provide performance benefits or data redundancy.

RAIDABLE (also known as RAID Ready) allows the user to add more storage space or create a redundant array after a system is installed.

RAID level comparison

	RAID 0	RAID 1	RAID 10
Minimum # drives	2	2	4
Data protection	None	Excellent	Excellent
Read performance	Excellent	OK	OK
Write performance	Excellent	Good	Good
Capacity utilization	100%	50%	50%

Important

All the information/ volumes/ pictures listed in your system might differ from the illustrations in this appendix.

Enabling RAIDXpert2 Configuration Utility

To enter the RAIDXpert2 Configuration Utility menu

1. Power on and press **Delete** key to enter BIOS Setup menu.
2. Press **F7** to switch to Advanced mode from EZ mode.
3. Go to **BIOS > SETTINGS > Advanced > Integrated Peripherals > SATA Mode** and change setting to **RAID Mode**.
4. Go to **BIOS > SETTINGS > Advanced > Windows OS Configuration > BIOS UEFI/ CSM Mode** and change setting to **UEFI.**
5. Press **F10** to save configuration and exit, and then reboot and press **Delete** key to enter BIOS Setup menu.
6. Go to **BIOS > SETTINGS > Advanced > RAIDXpert2 Configuration Utility** sub-menu**.**

Initializing Disks

New disks and legacy disks must be initialized before they can be used to create an AMD-RAID array. Initialization writes AMD-RAID configuration information (metadata) to a disk.

Important

- *If a disk is part of an AMD-RAID array, the disk cannot be selected for initialization. To initial the disk anyway, delete the AMD-RAID array. Data on the disk is deleted during initialization so ensure the correct disks are chosen to initialize.*
- *A legacy disk can contain valid data. When a legacy disk is initialized, all data on the disk is lost.*

To initialize disks

1. As previously mentioned, enable RAIDXpert2 Configuration Utility.
2. Go to **BIOS > SETTINGS > Advanced > RAIDXpert2 Configuration Utility > Physical Disk Management > Select Physical Disk Operations > Initialize Disk** sub-menu**.**

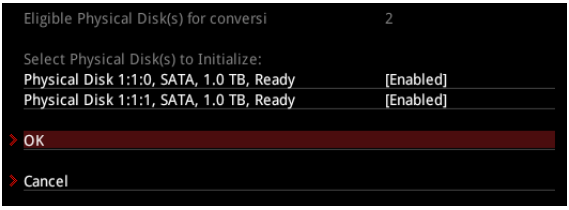

3. Select desired disks by changing the Physical Disk setting to **Enabled**.
4. Select **OK**, then press Enter.

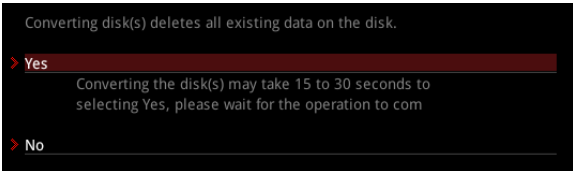

5. Review the warning message, if you want to proceed, select **YES**, then press Enter.
6. Initialization takes 10 to 15 seconds per disk. During initialization, a complete rescan of all channels is done automatically.

Creating Arrays

Arrays can be created after the disks are initialized.

Important

- *For redundant arrays, the Create process is not started until after the operating system and AMD-RAID OS drivers have been installed and the system has booted to the operating system. However, the arrays are immediately available to use for either a bootable array or a data array.*
- *Array numbers are valid only for a given boot and might be different in the RAIDXpert2 Configuration Utility and RAIDXpert2. If a permanent label is required, use the RAIDXpert2 Web GUI Array Naming feature.*
- *At any point in the procedure, return to a prior window by pressing ESC.*
- *If the system is booted from an AMD-RAID bootable array, the first array in the Arrays section must be the bootable array. The system boots only from the first array in the Arrays section.*

To create an array

1. As previously mentioned, enable RAIDXpert2 Configuration Utility.
2. Go to **BIOS > SETTINGS > Advanced > RAIDXpert2 Configuration Utility > Array Management > Create Array** sub-menu**.**



3. Select the RAID level from the **Select RAID Level** drop down menu.
4. Enter **Select Physical Disks** sub-menu, select member disks by changing the Physical Disk setting to **Enabled**.

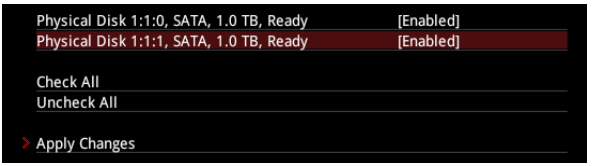

5. Select **Apply Changes**, then press Enter to apply and go back to previous sub-menu.
6. Change the **Select CacheTagSize**, **Read Cache Policy** and **Write Cache Policy** settings according to your needs.
7. Select **Create Array**, then press Enter.

Deleting Arrays

Important

• Deleting an array permanently destroys all data that is on the array. This action cannot be undone and it is very unlikely that the data can be recovered.

• Do not delete the first array listed in the Arrays section, if it is the AMD-RAID bootable array. Doing this deletes the operating system and AMD-RAID files.

To delete an array

1. As previously mentioned, enable RAIDXpert2 Configuration Utility.
2. Go to **BIOS > SETTINGS > Advanced > RAIDXpert2 Configuration Utility > Array Management > Delete Array** sub-menu**.**

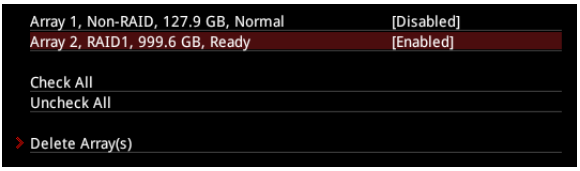

3. Select the desired array and change the setting to **Enabled**.
4. Enter **Delete Array(s)** sub-menu.

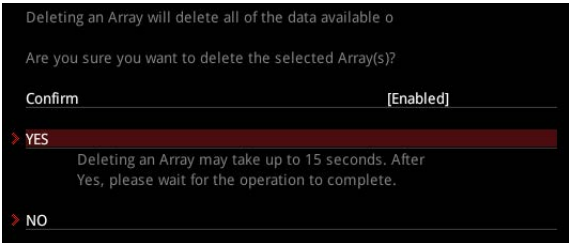

5. Review the warning message, if you want to proceed, Select **Confirm** and change the setting to **Enabled**.
6. Select **YES** then press Enter.

Installing RAID Driver

New Operating System Installation

The following details the installation of the drivers while installing operating system.

1. During the operating system installation, after selecting the location to install Windows click on **Load driver** button to install a third party RAID driver.
2. When prompted, insert the USB flash drive with **AMD RAID Drivers** and then click **Browse**.
   - To make an **AMD RAID Drivers** USB flash drive. Insert the MSI Driver Disc into the optical drive. Copy all the contents in \\Storage\AMD\
3. Navigate to the directory containing the saved AMD RAID drivers, then click **OK**.
4. Select the **(rcbottom.inf)** driver, click **Next**.
5. When prompted, click **OK.**
6. Click **Browse** and navigate to the directory containing the saved AMD RAID drivers again, then click **OK**.
7. Select the **(rcraid.inf)** driver, click **Next**.
8. You have successfully installed the RAID driver, and Windows setup should continue.
9. Leave the disk/ USB drive in the computer until the system reboots itself. Windows setup will need to copy the files after the RAID volume is formatted, and Windows setup starts copying files.

AMD RAIDXpert2 Management Suite Installation

1. Set the **SATA Mode** to **RAID Mode** in BIOS
2. Insert the MSI Driver Disc into the optical drive.
3. Click the **Select to choose what happens with this disc** pop-up notification, then select **Run DVDSetup.exe** to open the installer. If you turn off the AutoPlay feature from the Windows Control Panel, you can still manually execute the **DVDSetup.exe** from the root path of the MSI Driver Disc.
4. Under the **Drivers/Software** tab, check the **AMD RAID Drivers** check-box.
5. Click the **Install** button.
6. When prompt you to restart, click **OK** button to finish.
7. Restart your computer and enter the Windows operating system.
8. Double-click the **RAIDXpert2** icon to open the RAIDXpert2 Web GUI.
   - Default credentials are:
     - Username - **admin**
     - Password - **admin**
9. Change the credentials:
   - Create new username and password
10. Re-log into the RAIDXpert2 Web GUI with the new credentials.

Troubleshooting

Before sending the motherboard for RMA repair, try to go over troubleshooting guide first to see if your got similar symptoms as mentioned below.

The power is not on.

• Connect the AC power cord to an electrical outlet securely.

• Check if all ATX power connectors like **ATX_PWR1, CPU_PWR1** are connected from the power supply to the motherboard?

• Some power supply units have a power button on the rear side, make sure the button is turned on.

• Check if the power switch cable is connected to **JFP1** pin header properly.

• Verify the **Clear CMOS** jumper **JBAT1** is set to **Keep DATA**.

• Test with another known working power supply of equal or greater wattage.

The power is on, but no signal to monitor

• Connect the monitor power cord to a electrical outlet securely.

• Make sure the monitor is turned on.

• Select different inputs on the monitor.

• If 3 long beeps are heard, remove all memory modules and try to install only one memory module in the **DIMMA2** slot first and then restart the computer.

• If 1 long 2 short beeps are heard, remove and reinstall the graphics card and then restart the computer.

• Test with another known working graphics card.

The computer does not boot after updating the BIOS

• Clear the CMOS.

• Use the secondary BIOS to bootup the system (Only for motherboard with Dual BIOS)

Lost BIOS password

• Clear the CMOS, but that will cause you to lose all customized settings in the BIOS.

There is no audio

• Adjust the volume.

• Connect the speakers/headphones to audio ports on the motherboard rear IO panel.

• Remove secondary speakers/ headphones, HDMI cables, USB audio devices.

• Test with another known working speaker or headphone.

There is no network

• Make sure the network chipset driver has been installed.

• Verify if the network cable is properly connected and make sure the LAN port LEDs are properly illuminated.

• Verify your TCP/IP settings.

• Restart or reset your router.

• Test with another known working LAN cable.

The USB device is not working

• Make sure your USB drive driver has been installed.

• Verify if USB device is listed in Windows® Device Manager.

• Connect the USB device to other USB port on the motherboard rear IO panel.

Regulatory Notices

FCC Compliance Statement

Note: This equipment has been tested and found to comply with the limits for a Class B digital device, pursuant to part 15 of the FCC Rules. These limits are designed to provide reasonable protection against harmful interference in a residential installation. This equipment generates, uses and can radiate radio frequency energy and, if not installed and used in accordance with the instructions, may cause harmful interference to radio communications. However, there is no guarantee that interference will not occur in a particular installation. If this equipment does cause harmful interference to radio or television reception, which can be determined by turning the equipment off and on, the user is encouraged to try to correct the interference by one or more of the following measures:

- Reorient or relocate the receiving antenna.
- Increase the separation between the equipment and receiver.
- Connect the equipment into an outlet on a circuit different from that to which the receiver is connected.
- Consult the dealer or an experienced radio/TV technician for help.

Caution: Changes or modifications not expressly approved by the party responsible for compliance could void the user's authority to operate the equipment.

Tested to comply with FCC standards
FOR HOME OR OFFICE USE

This device complies with part 15 of the FCC Rules. Operation is subject to the following two conditions:

(1) This device may not cause harmful interference, and (2) this device must accept any interference received, including interference that may cause undesired operation.

CE Conformity

Products bearing the CE marking comply with one or more of the following EU Directives as may be applicable:

RED 2014/53/EU; Low Voltage Directive 2014/35/EU; EMC Directive 2014/30/EU; RoHS Directive 2011/65/EU.

Compliance with these directives is assessed using applicable European Harmonized Standards.

The point of contact for regulatory matters is MSI, MSI-NL Eindhoven 5706 5692 ER Son.

KC인증서 (MPG B550 GAMING CARBON WIFI)

R-R-MSI-10-7C90

상호: (주)엠에스아이코리아
제품명: 메인보드
모델명: 10-7C90
제조년월: 2020년
제조자 및 제조국가: MSI/중국

クラスB情報技術装置

この装置は、クラスB情報技術装置です。この装置は、家庭環境で使用することを目的としていますが、この装置がラジオやテレビジョン受信機に近接して使用されると、受信障害を引き起こすことがありま す。取扱説明書に従って
正しい取り扱いをして下さい

VCCI-B

C-Tick Compliance

N1996

Battery Information

European Union:

Batteries, battery packs, and accumulators should not be disposed of as unsorted household waste. Please use the public collection system to return, recycle, or treat them in compliance with the local regulations.

Taiwan:

廢電池請回收
For better environmental protection, waste batteries should be collected separately for recycling or special disposal.

California, USA:

The button cell battery may contain perchlorate material and requires special handling when recycled or disposed of in California.
For further information please visit:
http://www.dtsc.ca.gov/hazardouswaste/perchlorate/

CAUTION: There is a risk of explosion, if battery is incorrectly replaced.

Replace only with the same or equivalent type recommended by the manufacturer.

Chemical Substances Information

In compliance with chemical substances regulations, such as the EU REACH Regulation (Regulation EC No. 1907/2006 of the European Parliament and the Council), MSI provides the information of chemical substances in products at:

http://www.msi.com/html/popup/csr/evmtprtt_pcm.html

Environmental Policy

- The product has been designed to enable proper reuse of parts and recycling and should not be thrown away at its end of life.
- Users should contact the local authorized point of collection for recycling and disposing of their end-of-life products.
- Visit the MSI website and locate a nearby distributor for further recycling information.
- Users may also reach us at gpcontdev@msi.com for information regarding proper Disposal, Take-back, Recycling, and Disassembly of MSI products.

WEEE (Waste Electrical and Electronic Equipment) Statement

ENGLISH

To protect the global environment and as

an environmentalist, MSI must remind you that...

Under the European Union ("EU") Directive on Waste Electrical and Electronic Equipment, Directive 2002/96/EC, which takes effect on August 13, 2005, products of "electrical and electronic equipment" cannot be discarded as municipal wastes anymore, and manufacturers of covered electronic equipment will be obligated to take back such products at the end of their useful life. MSI will comply with the product take back requirements at the end of life of MSI-branded products that are sold into the EU. You can return these products to local collection points.

DEUTSCH

Hinweis von MSI zur Erhaltung und Schutz unserer Umwelt

Gemäß der Richtlinie 2002/96/EG über Elektro- und Elektronik-Altgeräte dürfen Elektro- und Elektronik-Altgeräte nicht mehr als kommunale Abfälle entsorgt werden. MSI hat europaweit verschiedene Sammel- und Recyclingunternehmen beauftragt, die in die Europäische Union in Verkehr gebrachten Produkte, am Ende seines Lebenszyklus zurückzunehmen. Bitte entsorgen Sie dieses Produkt zum gegebenen Zeitpunkt ausschliesslich an einer lokalen Altgerätesammelstelle in Ihrer Nähe.

FRANÇAIS

En tant qu'écologiste et afin de protéger l'environnement, MSI tient à rappeler ceci...

Au sujet de la directive européenne (EU) relative aux déchets des équipement électriques et électroniques, directive 2002/96/EC, prenant effet le 13 août 2005, que les produits électriques et électroniques ne peuvent être déposés dans les décharges ou tout simplement mis à la poubelle. Les fabricants de ces équipements seront obligés de récupérer certains produits en fin de vie. MSI prendra en compte cette exigence relative au retour des produits en fin de vie au sein de la communauté européenne. Par conséquent vous pouvez retourner localement ces matériels dans les points de collecte.

РУССКИЙ

Компания MSI предпринимает активные действия по защите окружающей среды, поэтому напоминаем вам, что....

В соответствии с директивой Европейского Союза (ЕС) по предотвращению загрязнения окружающей среды использованным электрическим и электронным оборудованием (директива WEEE 2002/96/EC), вступающей в силу 13 августа 2005 года, изделия, относящиеся к электрическому и электронному оборудованию, не могут рассматриваться как бытовой мусор, поэтому производители вышеперечисленного электронного оборудования обязаны принимать его для переработки по окончании срока службы. MSI обязуется соблюдать требования по приему продукции, проданной под маркой MSI на территории ЕС, в переработку по окончании срока службы. Вы можете вернуть эти изделия в специализированные пункты приема.

ESPAÑOL

MSI como empresa comprometida con la protección del medio ambiente, recomienda:

Bajo la directiva 2002/96/EC de la Unión Europea en materia de desechos y/o equipos electrónicos, con fecha de rigor desde el 13 de agosto de 2005, los productos clasificados como "eléctricos y equipos electrónicos" no pueden ser depositados en los contenedores habituales de su municipio, los fabricantes de equipos electrónicos, están obligados a hacerse cargo de dichos productos al termino de su período de vida. MSI estará comprometido con los términos de recogida de sus productos vendidos en la Unión Europea al final de su periodo de vida. Usted debe depositar estos productos en el punto limpio establecido por el ayuntamiento de su localidad o entregar a una empresa autorizada para la recogida de estos residuos.

NEDERLANDS

Om het milieu te beschermen, wil MSI u eraan herinneren dat....

De richtlijn van de Europese Unie (EU) met betrekking tot Vervuiling van Electrische en Electronische producten (2002/96/EC), die op 13 Augustus 2005 in zal gaan kunnen niet meer beschouwd worden als vervuiling. Fabrikanten van dit soort producten worden verplicht om producten retour te nemen aan het eind van hun levenscyclus. MSI zal overeenkomstig de richtlijn handelen voor de producten die de merknaam MSI dragen en verkocht zijn in de EU. Deze goederen kunnen geretourneerd worden op lokale inzamelingspunten.

SRPSKI

Da bi zaštitili prirodnu sredinu, i kao preduzeće koje vodi računa o okolini i prirodnoj sredini, MSI mora da vas podesti da...

Po Direktivi Evropske unije ("EU") o odbačenoj ekektronskoj i električnoj opremi, Direktiva 2002/96/EC, koja stupa na snagu od 13. Avgusta 2005, proizvodi koji spadaju pod "elektronsku i električnu opremu" ne mogu više biti odbačeni kao običan otpad i proizvođači ove opreme biće prinuđeni da uzmu natrag ove proizvode na kraju njihovog uobičajenog veka trajanja. MSI će poštovati zahtev o preuzimanju ovakvih proizvoda kojima je istekao vek trajanja, koji imaju MSI oznaku i koji su prodati u EU. Ove proizvode možete vratiti na lokalnim mestima za prikupljanje.

POLSKI

Aby chronić nasze środowisko naturalne oraz jako firma dbająca o ekologię, MSI przypomina, że...

Zgodnie z Dyrektywą Unii Europejskiej ("UE") dotyczącą odpadów produktów elektrycznych i elektronicznych (Dyrektywa 2002/96/EC), która wchodzi w życie 13 sierpnia 2005, tzw. "produkty oraz wyposażenie elektryczne i elektroniczne " nie mogą być traktowane jako śmieci komunalne, tak więc producenci tych produktów będą zobowiązani do odbierania ich w momencie gdy produkt jest wycofywany z użycia. MSI wypełni wymagania UE, przyjmując produkty (sprzedawane na terenie Unii Europejskiej) wycofywane z użycia. Produkty MSI będzie można zwracać w wyznaczonych punktach zbiorczych.

TÜRKÇE

Çevreci özelliğiyle bilinen MSI dünyada çevreyi korumak için hatırlatır:

Avrupa Birliği (AB) Kararnamesi Elektrik ve Elektronik Malzeme Atığı, 2002/96/EC Kararnamesi altında 13 Ağustos 2005 tarihinden itibaren geçerli olmak üzere, elektrikli ve elektronik malzemeler diğer atıklar gibi çöpe atılamayacak ve bu elektonik cihazların üreticileri, cihazların kullanım süreleri bittikten sonra ürünleri geri toplamakla yükümlü olacaktır. Avrupa

Birliği'ne satılan MSI markalı ürünlerin kullanım süreleri bittiğinde MSI ürünlerin geri alınması isteği ile işbirliği içerisinde olacaktır. Ürünlerinizi yerel toplama noktalarına bırakabilirsiniz.

ČESKY

Záleží nám na ochraně životního prostředí - společnost MSI upozorňuje...

Podle směrnice Evropské unie ("EU") o likvidaci elektrických a elektronických výrobků 2002/96/EC platné od 13. srpna 2005 je zakázáno likvidovat "elektrické a elektronické výrobky" v běžném komunálním odpadu a výrobci elektronických výrobků, na které se tato směrnice vztahuje, budou povinni odebírat takové výrobky zpět po skončení jejich životnosti. Společnost MSI splní požadavky na odebírání výrobků značky MSI, prodávaných v zemích EU, po skončení jejich životnosti. Tyto výrobky můžete odevzdat v místních sběrnách.

MAGYAR

Annak érdekében, hogy környezetünket megvédjük, illetve környezetvédőként fellépve az MSI emlékezteti Önt, hogy ...

Az Európai Unió („EU") 2005. augusztus 13-án hatályba lépő, az elektromos és elektronikus berendezések hulladékairól szóló 2002/96/EK irányelve szerint az elektromos és elektronikus berendezések többé nem kezelhetőek lakossági hulladékként, és az ilyen elektronikus berendezések gyártói kötelessé válnak az ilyen termékek visszavételére azok hasznos élettartama végén. Az MSI betartja a termékvisszavétellel kapcsolatos követelményeket az MSI márkanév alatt az EU-n belül értékesített termékek esetében, azok élettartamának végén. Az ilyen termékeket a legközelebbi gyűjtőhelyre viheti.

ITALIANO

Per proteggere l'ambiente, MSI, da sempre amica della natura, ti ricorda che....

In base alla Direttiva dell'Unione Europea (EU) sullo Smaltimento dei Materiali Elettrici ed Elettronici, Direttiva 2002/96/EC in vigore dal 13 Agosto 2005, prodotti appartenenti alla categoria dei Materiali Elettrici ed Elettronici non possono più essere eliminati come rifiuti municipali: i produttori di detti materiali saranno obbligati a ritirare ogni prodotto alla fine del suo ciclo di vita. MSI si adeguerà a tale Direttiva ritirando tutti i prodotti marchiati MSI che sono stati venduti all'interno dell'Unione Europea alla fine del loro ciclo di vita. È possibile portare i prodotti nel più vicino punto di raccolta

日本JIS C 0950材質宣言

日本工業規格JIS C 0950により、2006年7月1日以降に販売される特定分野の電気および電子機器について、製造者による含有物質の表示が義務付けられます。

http://www.msi.com/html/popup/csr/cemm_jp.html

http://tw.msi.com/html/popup/csr_tw/cemm_jp.html

India RoHS

This product complies with the "India E-waste (Management and Handling) Rule 2011" and prohibits use of lead, mercury, hexavalent chromium, polybrominated biphenyls or polybrominated diphenyl ethers in concentrations exceeding 0.1 weight % and 0.01 weight % for cadmium, except for the exemptions set in Schedule 2 of the Rule.

Türkiye EEE yönetmeliği

Türkiye Cumhuriyeti: EEE Yönetmeliğine Uygundur

Україна обмеження на наявність небезпечних речовин

Обладнання відповідає вимогам Технічного регламенту щодо обмеження використання деяких небезпечних речовин в електричному та електронному обладнані, затвердженого постановою Кабінету Міністрів України від 3 грудня 2008 № 1057.

Việt Nam RoHS

Kể từ ngày 01/12/2012, tất cả các sản phẩm do công ty MSI sản xuất tuân thủ Thông tư số 30/2011/TT-BCT quy định tạm thời về giới hạn hàm lượng cho phép của một số hóa chất độc hại có trong các sản phẩm điện, điện tử"

Wireless Radio Use

This device is restricted to indoor use when operating in the 2.4GHz, 5GHz frequency band.

Cet appareil doit être utilisé à l'intérieur.

당해 무선설비는 운용중 전파혼신 가능성이 있음.

この製品は、周波数帯域 2.4GHz, 5GHz で動作しているときは、屋内においてのみ使用可能です。

NCC無線設備警告聲明

工作頻率2.4GHz, 5GHz該頻段限於室內使用。

經型式認證合格之低功率射頻電機，非經許可，公司、商號或使用者均不得擅自變更頻率、加大功率或變更原設計之特性及功能。

低功率射頻電機之使用不得影響飛航安全及干擾合法通信；經發現有干擾現象時，應立即停用，並改善至無干擾時方得繼續使用。前項合法通信，指依電信法規定作業之無線電通信。低功率射頻電機須忍受合法通信或工業、科學及醫療用電波輻射性電機設備之干擾。

Products with radio functionality (EMF)

This product incorporates a radio transmitting and receiving device. For computers in normal use, a separation distance of 20 cm ensures that radio frequency exposure levels comply with EU requirements. Products designed to be operated at closer proximities, such as tablet computers, comply with applicable EU requirements in typical operating positions. Products can be operated without maintaining a separation distance unless otherwise indicated in instructions specific to the product.

Restrictions for products with radio functionality

CAUTION: IEEE 802.11x wireless LAN with 5.15–5.35 GHz frequency band is restricted for indoor use only in all European Union member states, EFTA (Iceland, Norway, Liechtenstein), and most other European countries (e.g., Switzerland, Turkey, Republic of Serbia). Using this WLAN application outdoors might lead to interference issues with existing radio services.

Radio frequency bands and maximum power levels

Features	:802.11 a/b/g/n/ac/ax, BT
Frequency Range	:2.4GHz, 5GHz
Modulation	:FHSS, DSSS, OFDM
Power Output	:10, 20, 23
Channel Band Width	:1, 5, 20 ,40 , 80, 160 MHz

MS-7C90主板产品中有害物质的名称及含量

部件名称	有害物质					
	铅 (Pb)	汞 (Hg)	镉 (Cd)	六价铬 (Cr(VI))	多溴联苯 (PBB)	多溴二苯醚 (PBDE)
印刷电路板组件*	×	○	○	○	○	○
电池**	×	○	○	○	○	○
外部信号连接头	×	○	○	○	○	○
线材	×	○	○	○	○	○

本表格依据 SJ/T 11364 的规定编制。

○: 表示该有害物质在该部件所有均质材料中的含量均在 GB/T 26572 规定的限量要求以下。

×: 表示该有害物质至少在该部件的某一均质材料中的含量超出 GB/T 26572 规定的限量要求，但所有部件都符合欧盟RoHS要求。

* 印刷电路板组件: 包括印刷电路板及其构成的零部件。

** 电池本体上如有环保使用期限标识，以本体标识为主。

■ 上述有毒有害物质或元素清单会依型号之部件差异而有所增减。

■ 產品部件本体上如有环保使用期限标识，以本体标识为主。

限用物質含有情況標示聲明書

設備名稱：電腦主機板			型號(型式)：MS-7C90			
單元	限用物質及其化學符號					
	鉛 (Pb)	汞 (Hg)	鎘 (Cd)	六價鉻 (Cr^{+6})	多溴聯苯 (PBB)	多溴二苯醚 (PBDE)
電路板	○	○	○	○	○	○
電子元件	—	○	○	○	○	○
金屬機構件	—	○	○	○	○	○
塑膠機構件	○	○	○	○	○	○

備考1. “超出0.1 wt %” 及 “超出0.01 wt %” 係指限用物質之百分比含量超出百分比含量基準值。

備考2. “○” 係指該項限用物質之百分比含量未超出百分比含量基準值。

備考3. “—” 係指該項限用物質為排除項目。

Copyright

MSI Micro-Star Int'l Co.,Ltd.

Copyright © 2020 All rights reserved.

The MSI logo used is a registered trademark of Micro-Star Int'l Co., Ltd. All other marks and names mentioned may be trademarks of their respective owners. No warranty as to accuracy or completeness is expressed or implied. MSI reserves the right to make changes to this document without prior notice.

Revision History

Version 1.0, 2020/05, First release.

Version 1.1, 2020/10, Modify KCC

Version 1.2, 2021/11, Add WiFi AX210

Technical Support

If a problem arises with your system and no solution can be obtained from the user guide, please contact your place of purchase or local distributor. Alternatively, please try the following help resources for further guidance.

- Visit the MSI website for technical guide, BIOS updates, driver updates, and other information: http://www.msi.com
- Register your product at: http://register.msi.com