Quick Start

Thank you for purchasing the MSI® **MEG Z590 UNIFY-X** motherboard. This Quick Start section provides demonstration diagrams about how to install your computer. Some of the installations also provide video demonstrations. Please link to the URL to watch it with the web browser on your phone or tablet. You may have even link to the URL by scanning the QR code.

Preparing Tools and Components

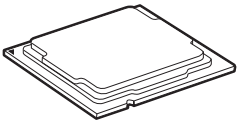

Intel® LGA1200 CPU

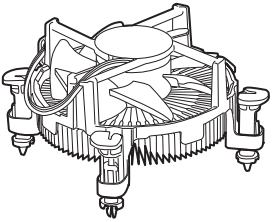

CPU Fan

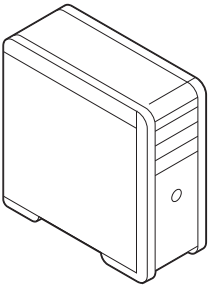

Chassis

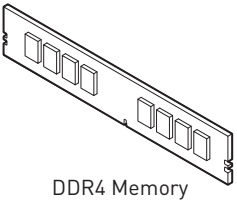

DDR4 Memory

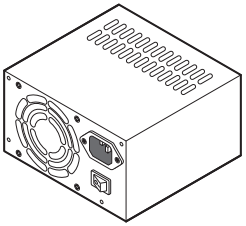

Power Supply Unit

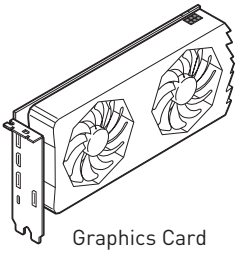

Graphics Card

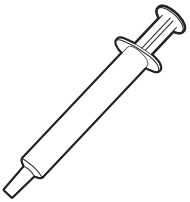

Thermal Paste

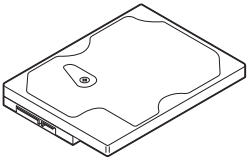

SATA Hard Disk Drive

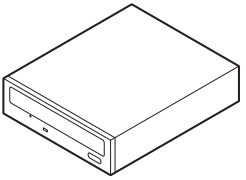

SATA DVD Drive

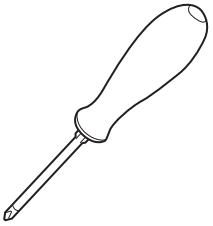

Phillips Screwdriver



A Package of Screws

Safety Information

• The components included in this package are prone to damage from electrostatic discharge (ESD). Please adhere to the following instructions to ensure successful computer assembly.

• Ensure that all components are securely connected. Loose connections may cause the computer to not recognize a component or fail to start.

• Hold the motherboard by the edges to avoid touching sensitive components.

• It is recommended to wear an electrostatic discharge (ESD) wrist strap when handling the motherboard to prevent electrostatic damage. If an ESD wrist strap is not available, discharge yourself of static electricity by touching another metal object before handling the motherboard.

• Store the motherboard in an electrostatic shielding container or on an anti-static pad whenever the motherboard is not installed.

• Before turning on the computer, ensure that there are no loose screws or metal components on the motherboard or anywhere within the computer case.

• Do not boot the computer before installation is completed. This could cause permanent damage to the components as well as injury to the user.

• If you need help during any installation step, please consult a certified computer technician.

• Always turn off the power supply and unplug the power cord from the power outlet before installing or removing any computer component.

• Keep this user guide for future reference.

• Keep this motherboard away from humidity.

• Make sure that your electrical outlet provides the same voltage as is indicated on the PSU, before connecting the PSU to the electrical outlet.

• Place the power cord such a way that people can not step on it. Do not place anything over the power cord.

• All cautions and warnings on the motherboard should be noted.

• If any of the following situations arises, get the motherboard checked by service personnel:

  - Liquid has penetrated into the computer.
  - The motherboard has been exposed to moisture.
  - The motherboard does not work well or you can not get it work according to user guide.
  - The motherboard has been dropped and damaged.
  - The motherboard has obvious sign of breakage.

• Do not leave this motherboard in an environment above 60°C (140°F), it may damage the motherboard.

Case stand-off notification

Before installing the motherboard into the case, install first the necessary mounting stand-off required for a motherboard on the mounting plate in the case.

To prevent damage to the motherboard, any unnecessary mounting stand-off between the motherboard circuits and the computer case is prohibited. The Case standoff keep out zone signs will be marked on the backside of motherboard (as shown below) to serve as a warning to user.

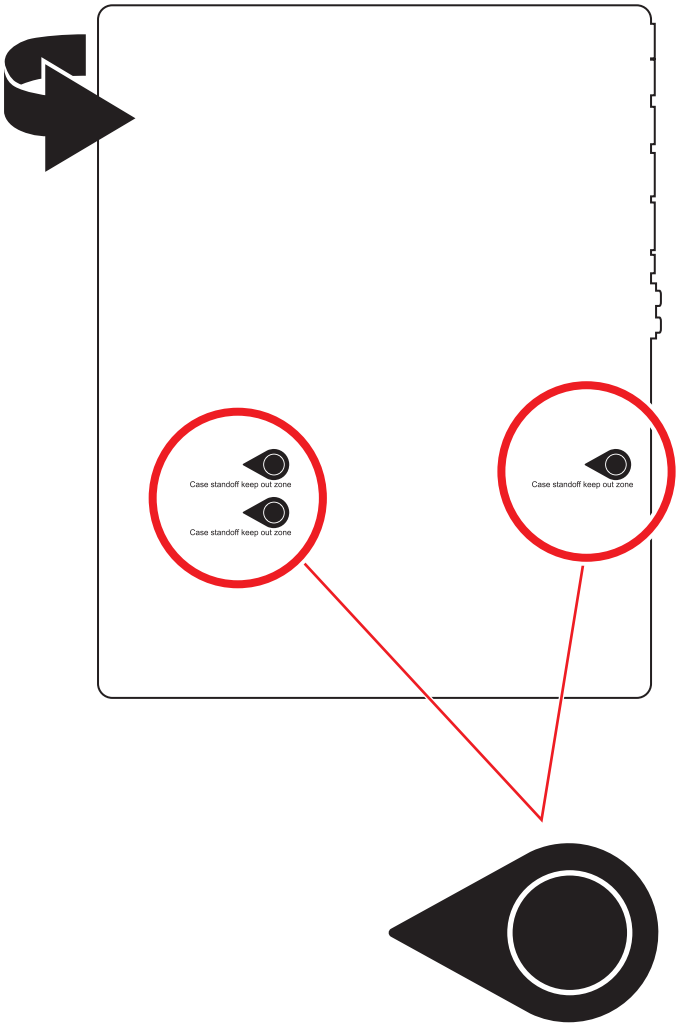

Installing a Processor

https://youtu.be/4ce91YC30ww

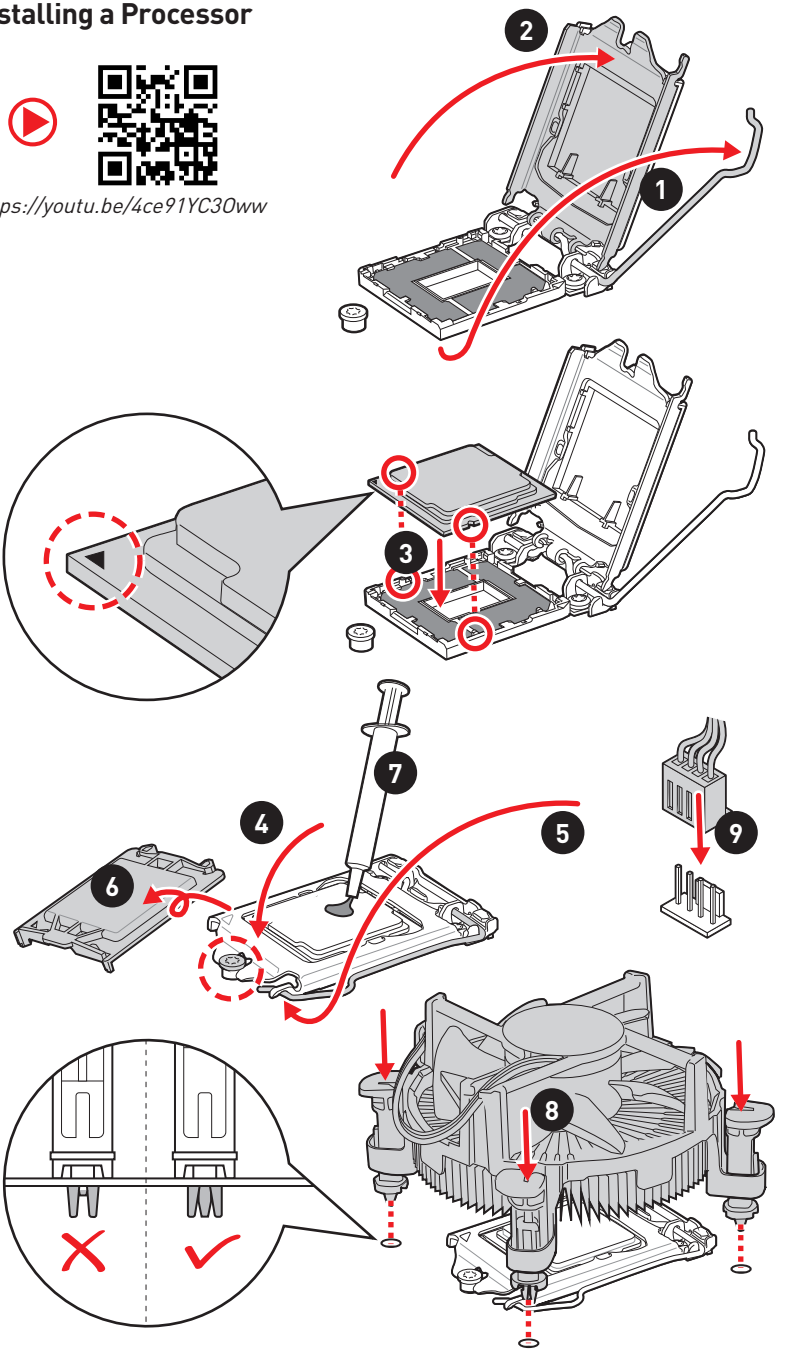

Installing DDR4 memory

http://youtu.be/T03aDrJPyQs

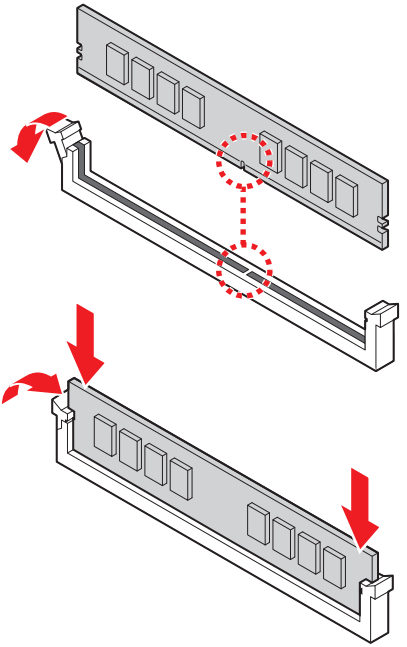

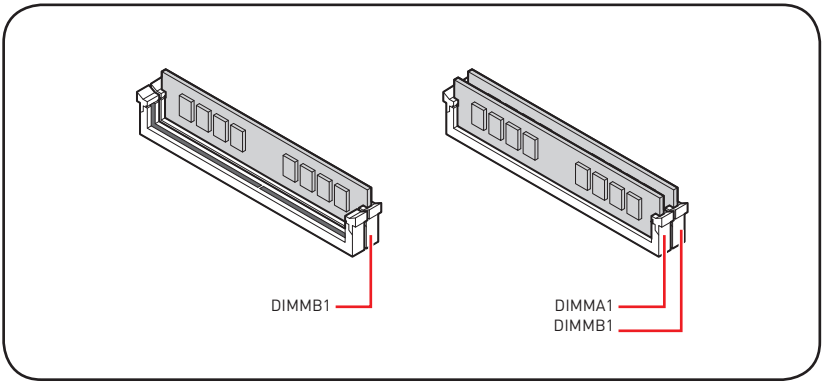

Connecting the Front Panel Header

http://youtu.be/DPELIdVNZUI

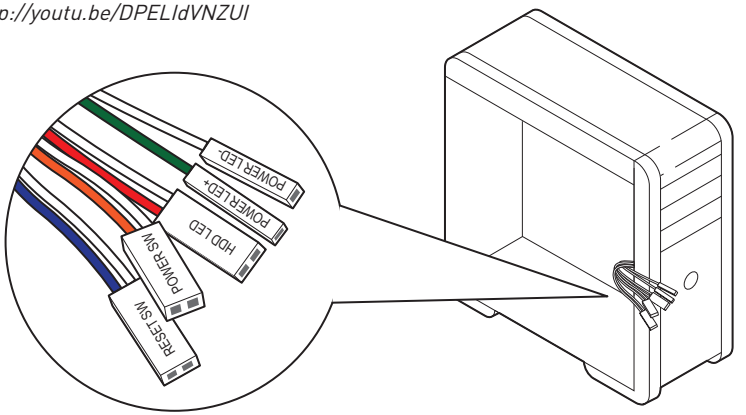

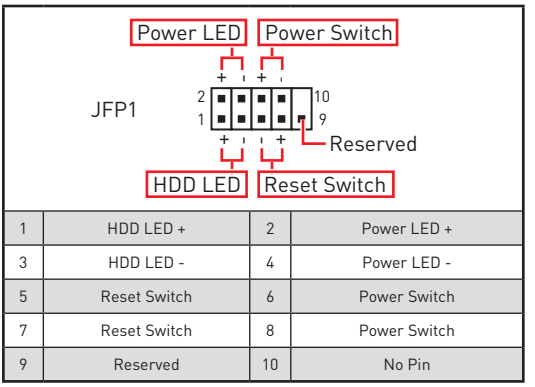

1	HDD LED +	2	Power LED +
3	HDD LED -	4	Power LED -
5	Reset Switch	6	Power Switch
7	Reset Switch	8	Power Switch
9	Reserved	10	No Pin

Installing the Motherboard

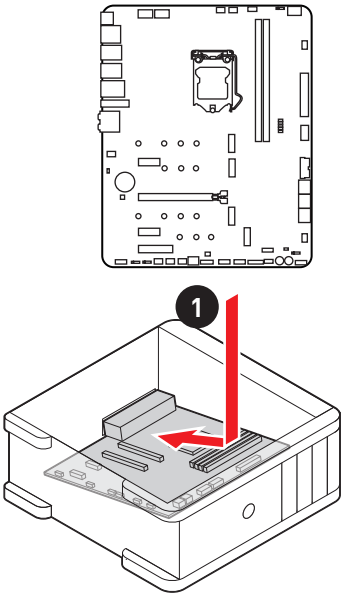

https://youtu.be/wWl6Qt51Wnc

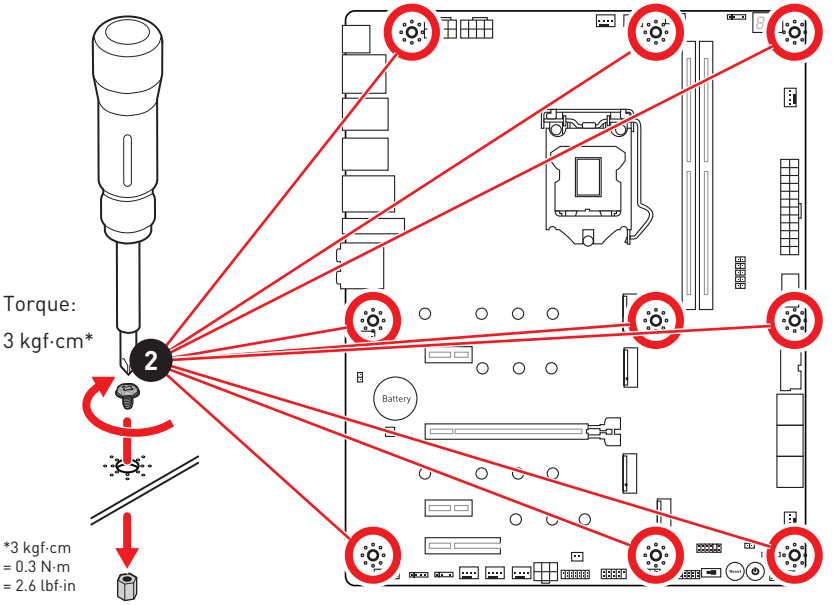

Connecting the Power Connectors

http://youtu.be/gkDYyR_83I4

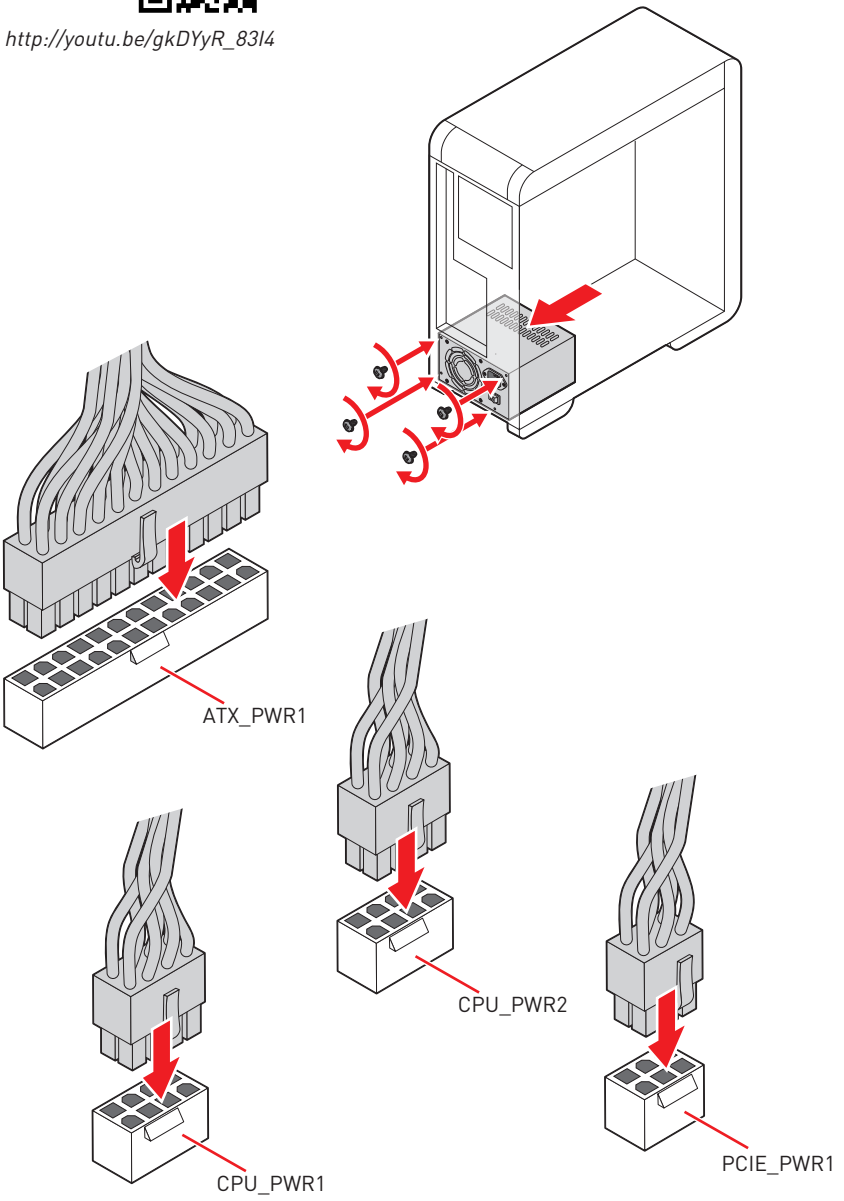

Installing SATA Drives

http://youtu.be/RZsMpqxythc

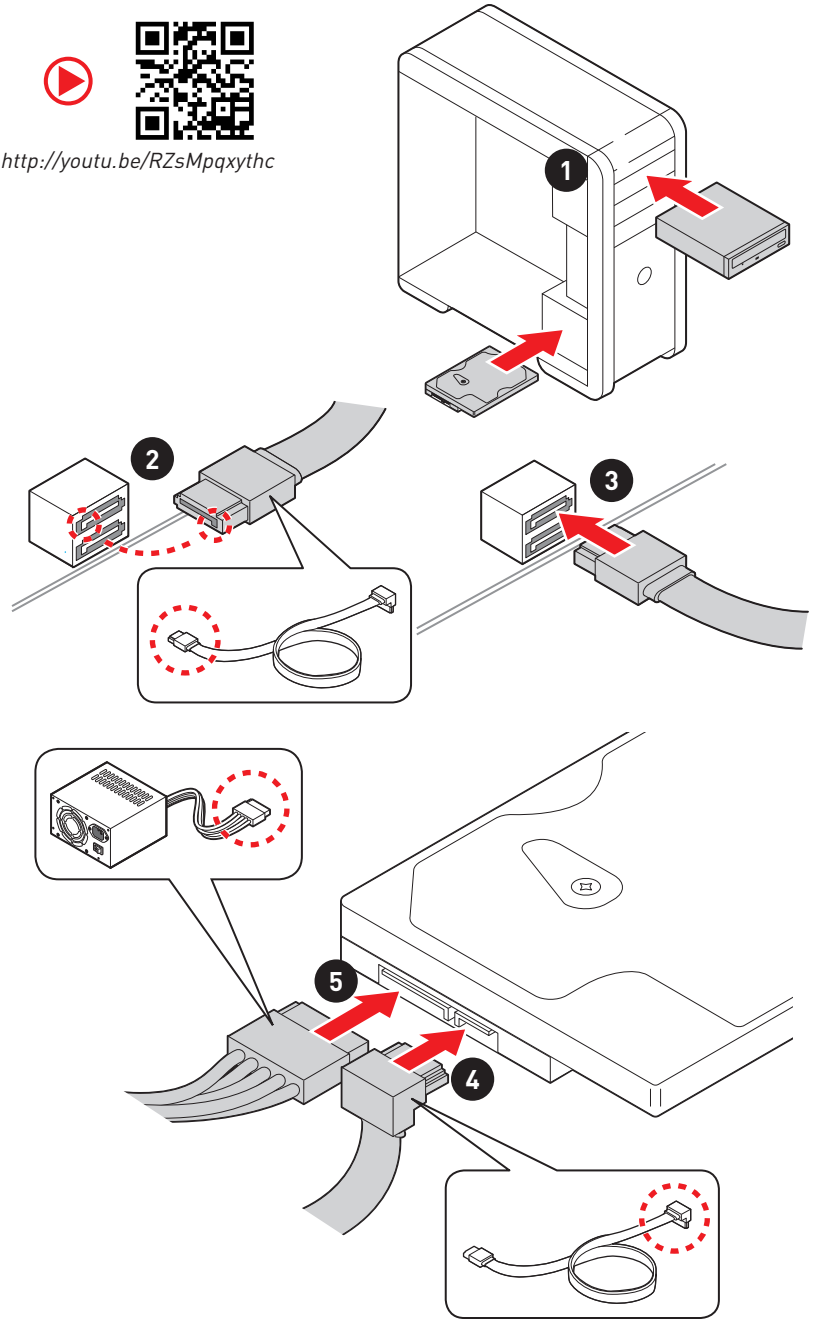

Installing a Graphics Card

http://youtu.be/mG0GZpr9w_A

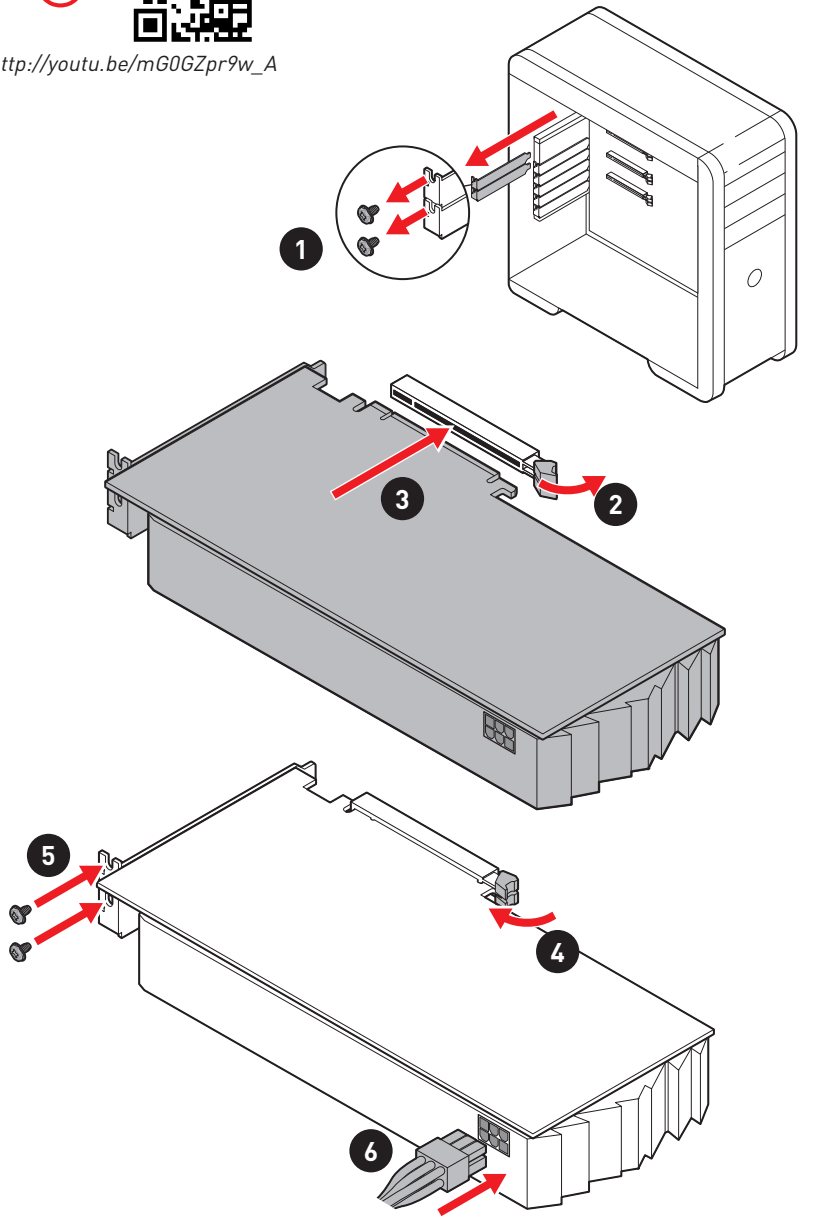

Connecting Peripheral Devices

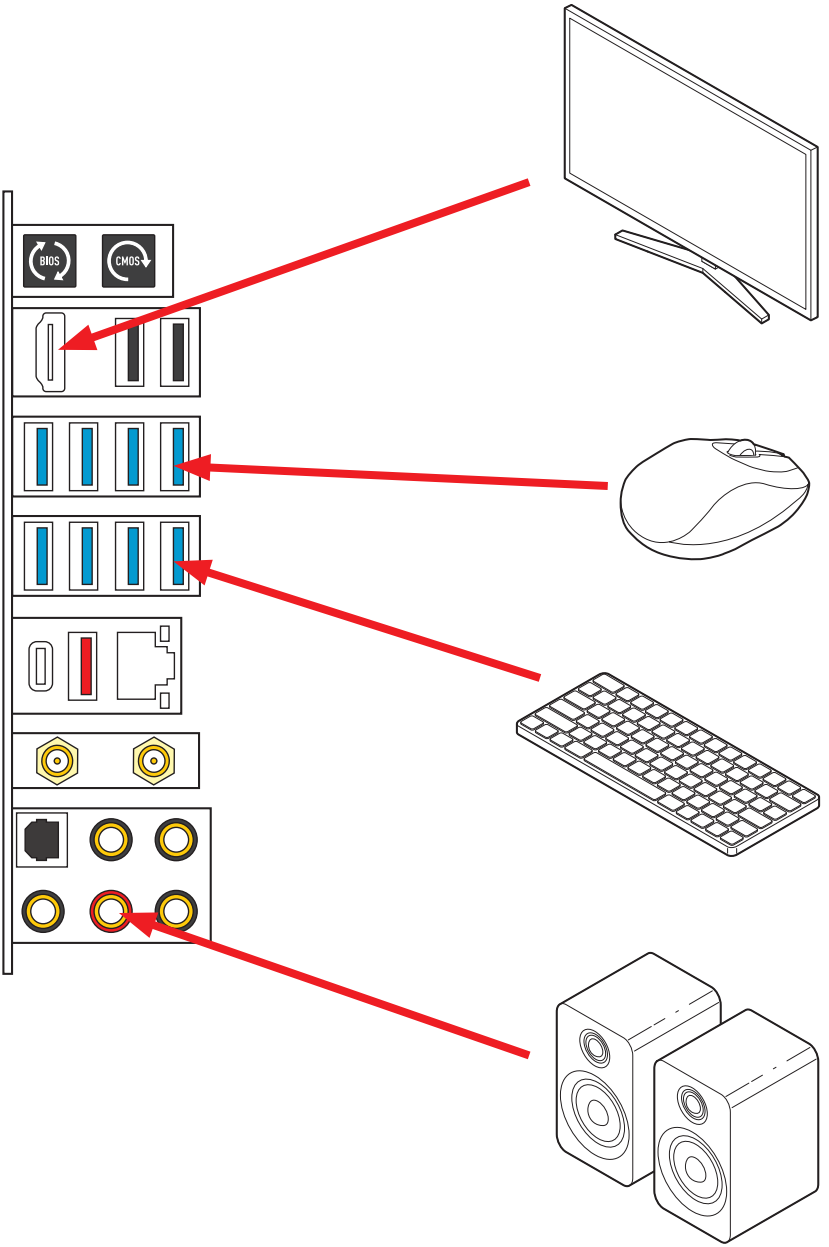

Power On

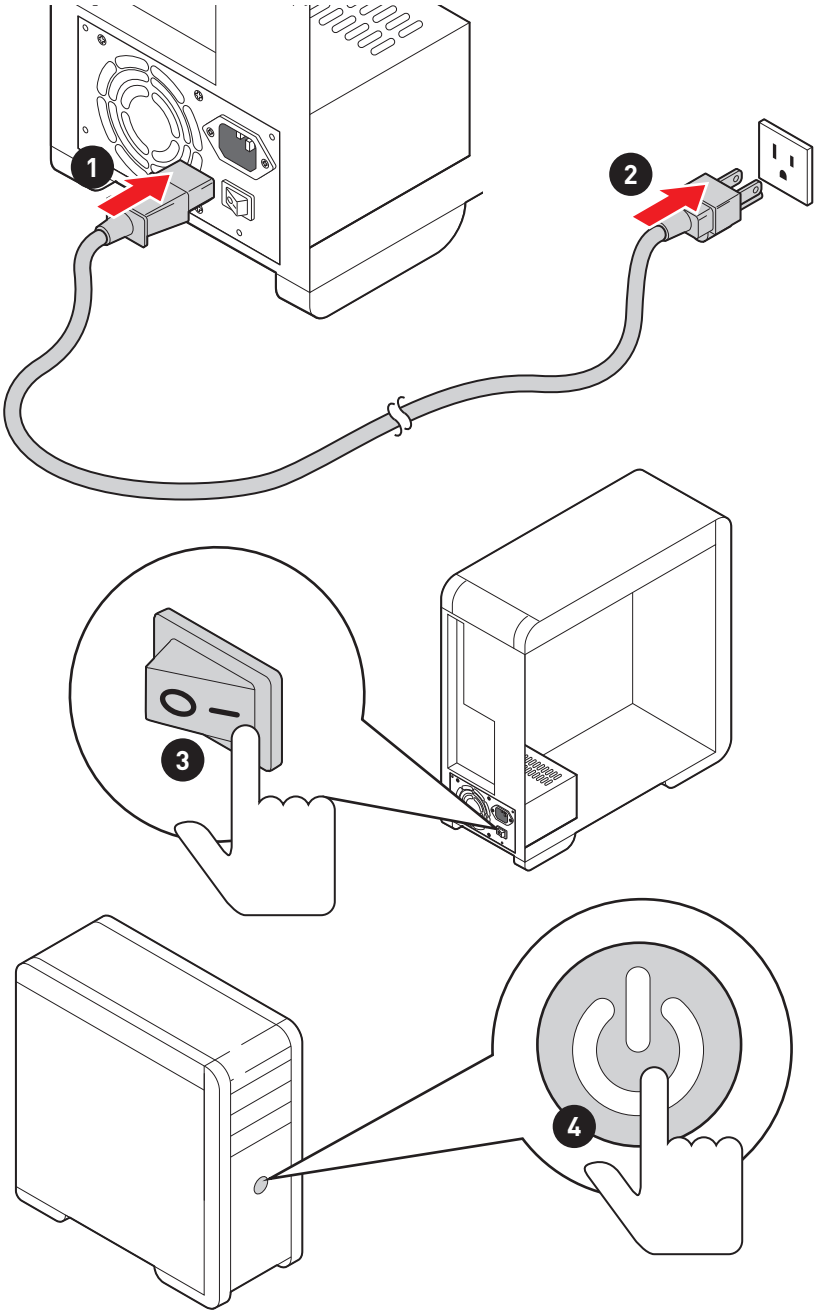

Contents

Quick Start **1**
Preparing Tools and Components 1
Safety Information 2
Case stand-off notification 3
Installing a Processor 4
Installing DDR4 memory 5
Connecting the Front Panel Header 6
Installing the Motherboard 7
Connecting the Power Connectors 8
Installing SATA Drives 9
Installing a Graphics Card 10
Connecting Peripheral Devices 11
Power On 12
Specifications **16**
JCORSAIR1 Connector Specification 23
Package contents **24**
Block Diagram **25**
Rear I/O Panel **26**
LAN Port LED Status Table 26
Audio Ports Configuration 26
Realtek Audio Console 27
Installing Antennas 29
Overview of Components **30**
CPU Socket 32
DIMM Slots 33
PCI_E1~4: PCIe Expansion Slots 34
M2_1~4: M.2 Slots (Key M) 36
SATA1~6: SATA 6Gb/s Connectors 38
JFP1, JFP2: Front Panel Connectors 39
JAUD1: Front Audio Connector 39
CPU_PWR1~2, ATX_PWR1, PCIE_PWR1: Power Connectors 40
JSLOW1: Slow Mode Booting Jumper 41
JLN1~2: Low Temperature Booting Jumper 41
JOC_FS1: Safe Boot Jumper 42
JOC_RT1: OC Retry Jumper 42
JTBT1: Thunderbolt Add-on Card Connector 42

V-Check Points Lite 43
T_SEN1: Thermal Sensor Connectors 43
JDASH1 : Tuning Controller connector 44
JUSB4: USB 3.2 Gen 2 Type-C Connector 46
JUSB3: USB 3.2 Gen 1 Connector 46
JUSB1~2: USB 2.0 Connectors 47
JTPM1: TPM Module Connector 47
CPU_FAN1, PUMP_FAN1, SYS_FAN1~6: Fan Connectors 48
JCI1: Chassis Intrusion Connector 49
POWER1, RESET1: Power Button, Reset Button 49
JBAT1: Clear CMOS (Reset BIOS) Jumper 50
BIOS_SW1: Multi-BIOS Switch 50
JRGB1: RGB LED connector 51
JRAINBOW1~2: Addressable RGB LED connectors 52
JCORSAIR1: CORSAIR Connector 53

Onboard LEDs 54

EZ Debug LED 54
XMP LED 54
Debug Code LED 54
Hexadecimal Character Table 55
Boot Phases 55
Debug Code LED Table 55
ACPI States Codes 59
CPU Temperature 59

Installing OS, Drivers & MSI Center 60

Installing Windows® 10 60
Installing Drivers 60
MSI Center 60

UEFI BIOS 61

BIOS Setup 62
Entering BIOS Setup 62
BIOS User Guide 62
Resetting BIOS 63
Updating BIOS 63

Nahimic 3 65

Installation and Update 65
Audio Tab 65
Microphone Tab 66

Sound Tracker Tab 67
Settings Tab 67
RAID Configuration 68
Intel® Optane™ Memory Configuration 69
Troubleshooting 70

Specifications

CPU	• Supports 10th Gen Intel® Core ™ Processors, 11th Gen Intel® Core ™ Processors, Pentium® Gold and Celeron® Processors* • Processor socket LGA1200 * Please go to intel.com for compatibility information
Chipset	Intel® Z590 Chipset
Memory	• 2x DDR4 memory slots, support up to 64GB* • Supports 1R 2133/ 2666/ 2933 MHz for 10th Gen Intel® CPU (by JEDEC & POR)* • Supports 1R 2133/ 2666/ 2933/ 3200 MHz for 11th Gen Intel® CPU (by JEDEC & POR)* • Max overclocking frequency: ▪ 1DPC 1R Max speed up to 5600 MHz ▪ 1DPC 2R Max speed up to 4800+ MHz • Supports Dual-Channel mode • Supports non-ECC mode, un-buffered memory • Supports Intel® Extreme Memory Profile (XMP) * Please refer www.msi.com for more information on compatible memory.
Expansion Slot	• 1x PCIe x16 slot (PCI_E2, from CPU) ▪ Supports up to PCIe 4.0 x16 with11th Gen CPU* ▪ Supports up to PCIe 3.0 x16 with10th Gen CPU* • 1x PCIe 3.0 x4 slot (PCI_E4, from Z590 chipset)** • 2x PCIe 3.0 x1 slots (from Z590 chipset) * PCI_E2 will only support x8 speed, when M2_2 and M2_3 are from CPU by BIOS selection. ** PCI_E4 and M2_4 share the same bandwidth, if you want to use both of them simultaneously, the PCI_E4 will only support x1 speed and the M2_4 will only support x2 speed. But if you want to install and enable the **graphics card** in PCI_E4 slot, the M2_4 slot should be empty.
Multi-GPU	• Supports 2-Way AMD® CrossFire™ Technology
Onboard Graphics	• 1x HDMI 2.0b with HDR port, supports a maximum resolution of 4K 60Hz */** * Available for the processor with integrated graphics. ** Graphics specifications may vary depending on the CPU installed.

Continued on next page

Continued from previous page

Storage	• 6x SATA 6Gb/s ports (from Z590 chipset) • 4x M.2 slots (Key M) ▪ M2_1 (from CPU) ▫ Available only on 11th Gen Intel® CPU ▫ Supports up to PCIe 4.0 x4 ▫ Supports 2242/ 2260/ 2280/ 22110 storage devices ▪ M2_2* & M2_3** slots ▫ Support up to PCIe 3.0 x4 and SATA 6Gb/s (from Z590 chipset, default)*** ▫ Support up to PCIe 4.0 x4 (from CPU, by BIOS selection), it is available only on 11th Gen Intel® CPU ▫ M2_2 supports 2242/ 2260/ 2280 storage devices ▫ M2_3 supports 2242/ 2260/ 2280/ 22110 storage devices ▪ M2_4 slot (from Z590 chipset)***/ **** ▫ Supports up to PCIe 3.0 x4, 2242/ 2260/ 2280 storage devices • Supports Intel® Smart Response Technology for Intel® Core™ processors * SATA2 will be unavailable when installing M.2 SATA SSD in the M2_2 slot. ** SATA5 & SATA6 will be unavailable when installing M.2 SATA/ PCIe SSD in the M2_2 or M2_3 slot. *** Intel® Optane™ Memory Ready. Before using Intel® Optane™ memory modules, please ensure that you have updated the drivers and BIOS to the latest version from MSI website. **** PCI_E4 and M2_4 share the same bandwidth, if you want to use both of them simultaneously, the PCI_E4 will only support x1 speed and the M2_4 will only support x2 speed. But if you want to install and enable the **graphics card** in PCI_E4 slot, the M2_4 slot should be empty.
RAID	• Supports RAID 0, RAID 1, RAID 5 and RAID 10 for SATA storage devices • Supports RAID 0 and RAID 1 for M.2 NVMe storage devices

Continued on next page

Continued from previous page

USB	• Intel® Z590 Chipset ▪ 1x USB 3.2 Gen 2x2 20Gbps Type-C port on the back panel ▪ 2x USB 3.2 Gen 2 10Gbps ports (1 Type-A port on the back panel and 1 Type-C internal connector) ▪ 10x USB 3.2 Gen 1 5Gbps ports (8 Type-A ports on the back panel, 2 ports are available through internal USB 3.2 Gen 1 connector) ▪ 2x USB 2.0 ports on the back panel • Hub-GL850G ▪ 4x USB 2.0 ports through internal USB 2.0 connectors
Audio	Realtek® ALC4080 Codec • 7.1-Channel High Definition Audio • Supports S/PDIF output
LAN	1x Intel® I225-V 2.5Gbps LAN controller
Wireless LAN & Bluetooth®	Intel® WiFi 6E AX210 • The Wireless module is pre-installed in the M.2 (Key-E) slot • Supports MU-MIMO TX/RX, 2.4GHz/ 5GHz/ 6GHz* (160MHz) up to 2.4Gbps • Supports 802.11a/ b/ g/ n/ ac/ ax • Supports Bluetooth® 5.2**, FIPS, FISMA * Wi-Fi 6E 6GHz may depend on every country's regulations and will be ready in WIN10 21H1. ** Bluetooth 5.2 will be ready in WIN10 21H1.

Continued on next page

Continued from previous page

Internal Connectors	• 1x 24-pin ATX main power connector • 2x 8-pin ATX 12V power connectors • 1x 6-pin ATX PCIE power connector • 6x SATA 6Gb/s connectors • 4x M.2 slots (M-Key) • 1x USB 3.2 Gen 2 10Gbps Type-C port • 1x USB 3.2 Gen 1 5Gbps connector (supports additional 2 USB 3.2 Gen 1 5Gbps ports) • 2x USB 2.0 connectors (supports additional 4 USB 2.0 ports) • 1x 4-pin CPU fan connector • 1x 4-pin water-pump fan connector • 6x 4-pin system fan connectors • 1x Front panel audio connector • 2x System panel connectors • 1x Chassis Intrusion connector • 1x 2-pin Thermal Sensors connector • 1xTPM module connector • 1x Tuning Controller connector • 1x TBT connector (Supports RTD3)
Jumper	• 1x Slow mode jumper • 2x Low Temperature Booting jumpers • 1x Clear CMOS jumper • 1x Safe boot jumper • 1x OC Retry jumper
LED Features	• 1x 2-Digit Debug Code LED • 4x EZ Debug LED • 1x 4-pin RGB LED connector • 2x 3-pin RAINBOW LED connectors • 1x 3-pin CORSAIR LED connector
Internal Buttons	• 1x Power button • 1x Reset button
Switches	• 1x Multi-BIOS switch

Continued on next page

Continued from previous page

Back Panel Connectors	• 1x Clear CMOS button • 1x Flash BIOS button • 2x USB 2.0 Type-A ports • 1x HDMI port • 8 x USB 3.2 Gen 1 5Gbps Type-A ports • 1 x LAN (RJ45) port • 1 x USB 3.2 Gen 2 10Gbps Type-A ports • 1 x USB 3.2 Gen 2x2 20Gbps Type-C ports • 2 x Wi-Fi Antenna connectors • 5 x OFC audio jacks • 1 x Optical S/PDIF Out connector
I/O Controller	NUVOTON NCT6687D-M Controller Chip
Hardware Monitor	• CPU/ System/ Chipset temperature detection • CPU/ System/ Pump fan speed detection • CPU/ System/ Pump fan speed control
Form Factor	• ATX Form Factor • 12 in. x 9.6 in. (30.5 cm x 24.4 cm)
BIOS Features	• Dual BIOS • 2x 256 Mb flash • UEFI AMI BIOS • ACPI 6.2, SMBIOS 3.0 • Multi-language

Continued on next page

Continued from previous page

Software	• Drivers • MSI Center • Intel® Extreme Tuning Utility • Nahimic • MSI APP Player (BlueStacks) • Open Broadcaster Software (OBS) • CPU-Z MSI GAMING • Google Chrome™, Google Toolbar, Google Drive • Norton™ Internet Security Solution
MSI Center Features	• Duet Display • MSI Sound Tune • Gaming Mode • Creator Mode • Game Highlights • LAN Manager • Mystic Light • Ambient Link • Frozr AI Cooling • User Scenario • True Color • Live Update • Monitor • Super Charger • Speed Up

Continued on next page

Continued from previous page

Special Features	• Audio ▪ Audio Boost 5 ▪ Nahimic 3 ▪ Sound Tune • Network ▪ 2.5G LAN ▪ LAN Manager ▪ Intel WiFi • Cooling ▪ All Aluminum Design ▪ Extended Heatsink Design ▪ MOSFET Baseplate ▪ M.2 Shield Frozr ▪ K7 thermal pad ▪ Choke pad ▪ Pump Fan ▪ Smart Fan Control • LED ▪ Mystic Light Extension (RAINBOW/CORSAIR/RGB) ▪ Mystic Light SYNC ▪ Ambient Link ▪ EZ LED Control ▪ EZ DEBUG LED • Protection ▪ PCI-E Steel Armor ▪ Pre-installed I/O Shielding

Continued on next page

Continued from previous page

Special Features	• Performance ▪ Lightning Gen 4 PCI-E Slot ▪ Lightning Gen 4 M.2 ▪ DDR4 Boost ▪ Memory Force ▪ Core Boost ▪ Game Boost ▪ OC Engine ▪ Lightning USB 20G ▪ USB 3.2 Gen 2 10G ▪ USB with Type A+C ▪ Front USB Type-C ▪ Dual CPU Power 2x 8 pin ▪ SUPPLEMENTAL PCIE POWER CONNECTOR ▪ 2oz Copper thickened PCB • Experience ▪ Smart Button ▪ MSI Center ▪ Duet Display ▪ Frozr AI Cooling ▪ Click BIOS 5 ▪ System Saver ▪ Flash BIOS Button

JCORSAIR1 Connector Specification

Supporting CORSAIR RGB Products	Maximum connection
Lighting Node PRO LED Strip	20* * 20% brightness is recommended when the number of LED strips exceeds 8.
HD120 RGB Fan	6
SP120 RGB Fan	6
LL120 RGB Fan	6

Package contents

Please check the contents of your motherboard package. It should contain:

Motherboard	MEG Z590 UNIFY-X	
Documentation	User manual	1
	Quick installation guide	1
Application	USB drive with drivers & utilities	1
Cables	SATA 6Gb/s cables	2
	LED JRGB Y cable	1
	LED JCORSAIR cable	1
	LED JRAINBOW cable	1
	Tuning controller cable	1
Accessories	Wi-Fi antenna	1
	Tuning controller module	1
	Case badge	1
	M.2 screw + standoff (2 sets/pack)	2
	MEG sticker	1
	SATA cable stickers	1
	Product registration card	1
Gifts	Small screwdriver set	1
	Small brush	1

Important

If any of the above items are damaged or missing, please contact your retailer.

Block Diagram

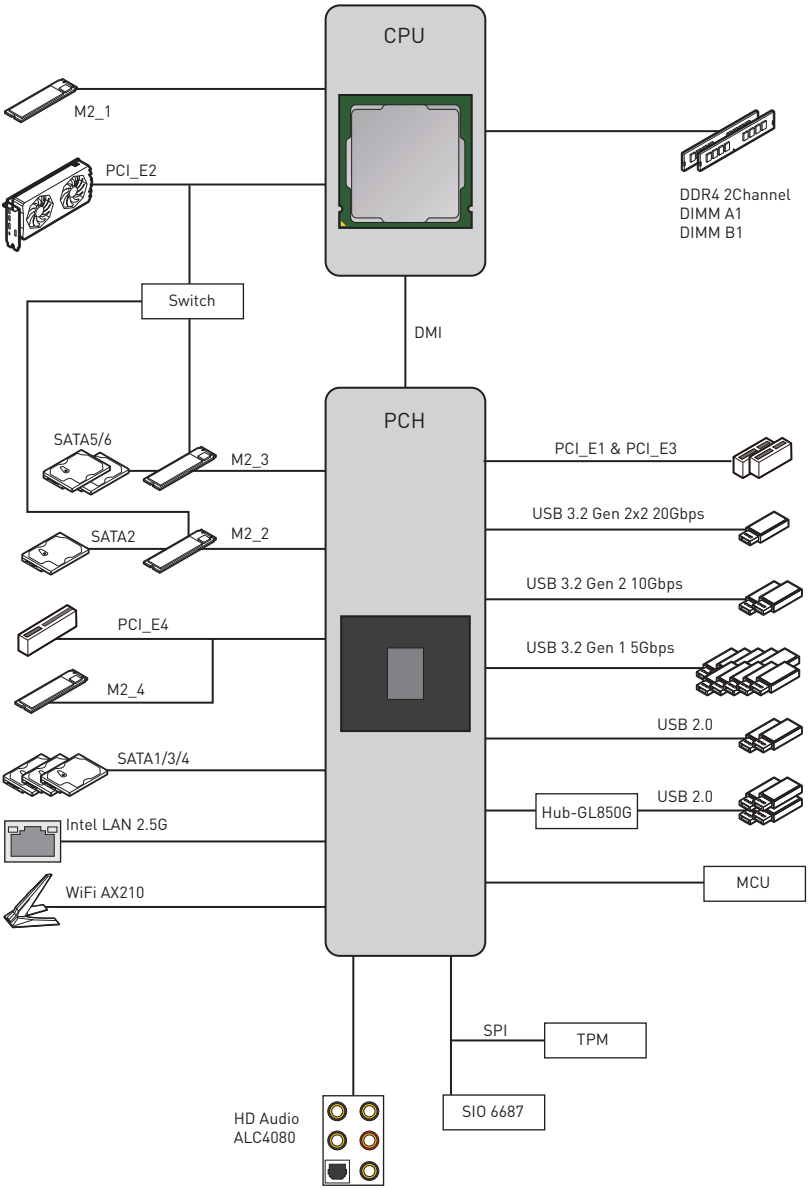

Rear I/O Panel

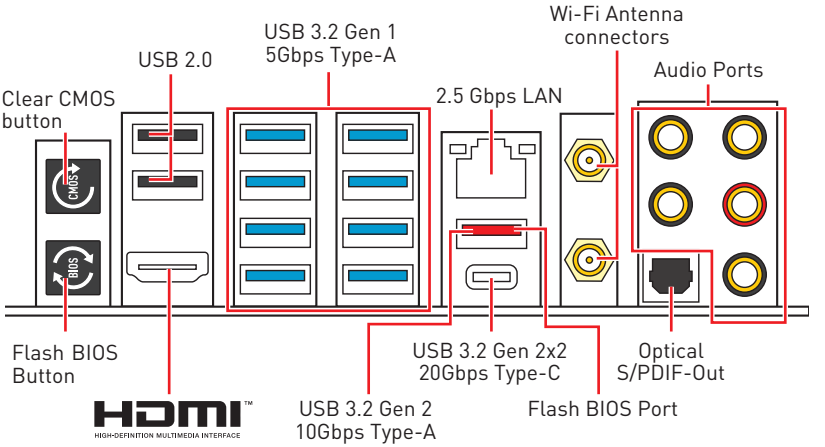

• **Clear CMOS button** - Power off your computer. Press and hold the Clear CMOS button for about 5-10 seconds to reset BIOS to default values.

• **Flash BIOS Port/ Button** - Please refer to page 62 for Updating BIOS with Flash BIOS Button.

LAN Port LED Status Table

Link/ Activity LED	
Status	**Description**
Off	No link
Yellow	Linked
Blinking	Data activity

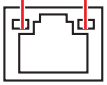

Speed LED	
Status	**Description**
Off	10 Mbps connection
Green	100/1000 Mbps connection
Orange	2.5 Gbps connection

Audio Ports Configuration

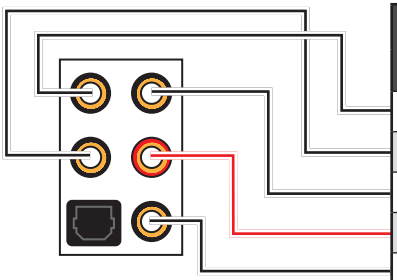

Audio Ports	Channel			
	2	4	6	8
Center/ Sub-woofer Out			●	●
Rear Speaker Out		●	●	●
Line-In/ Side Speaker Out				●
Line-Out/ Front Speaker Out	●	●	●	●
Mic In				

(●: connected, **Blank**: empty)

Realtek Audio Console

After Realtek Audio Console is installed. You can use it to change sound settings to get better sound experience.

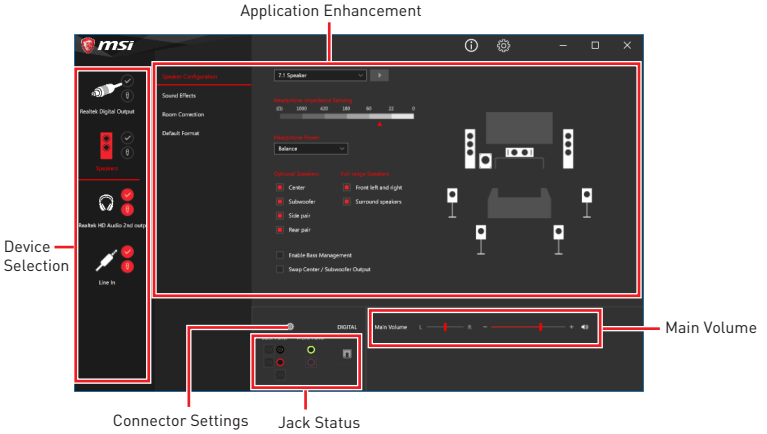

• **Device Selection** - allows you to select a audio output source to change the related options. The **check** sign indicates the devices as default.

• **Application Enhancement** - the array of options will provide you a complete guidance of anticipated sound effect for both output and input device.

• **Main Volume** - controls the volume or balance the right/left side of the speakers that you plugged in front or rear panel by adjust the bar.

• **Jack Status** - depicts all render and capture devices currently connected with your computer.

• **Connector Settings** - configures the connection settings.

Auto popup dialog

When you plug into a device at an audio jack, a dialogue window will pop up asking you which device is current connected.

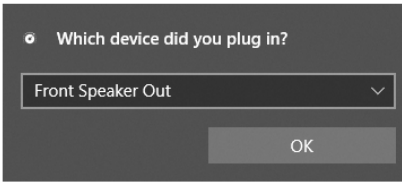

Each jack corresponds to its default setting as shown on the next page.

Important

The pictures above for reference only and may vary from the product you purchased.

Audio jacks to headphone and microphone diagram

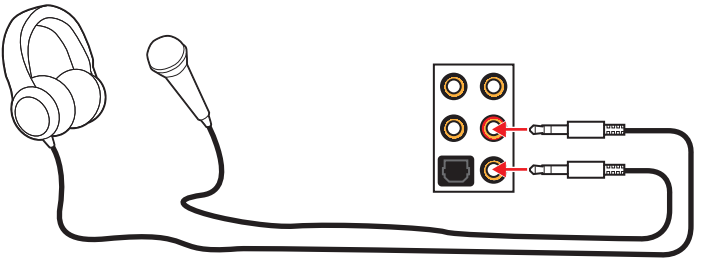

Audio jacks to stereo speakers diagram

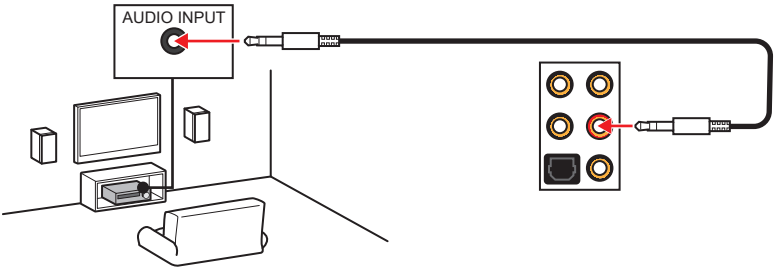

Audio jacks to 7.1-channel speakers diagram

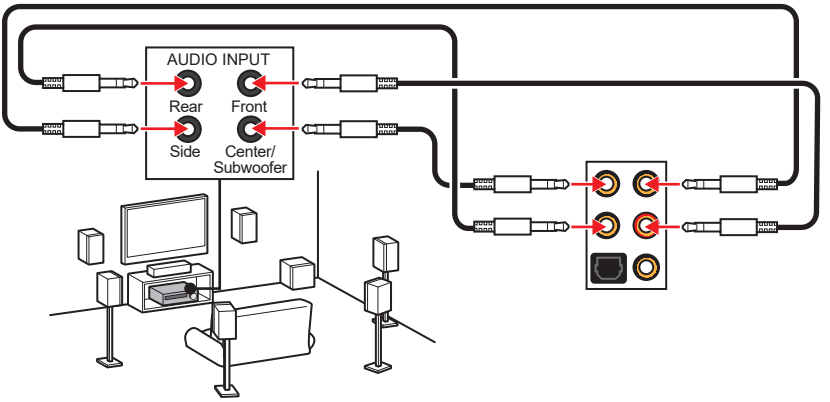

Installing Antennas

1. Combine the antenna with the base.
2. Screw two antenna cables tight to the WiFi antenna connectors as shown.

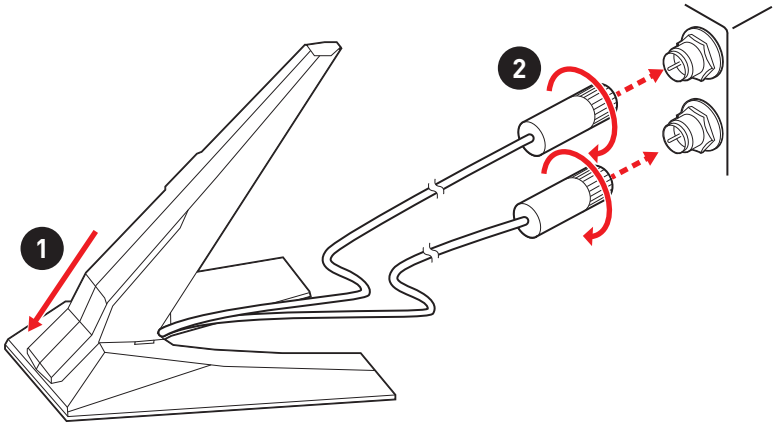

3. Place the antenna as high as possible.

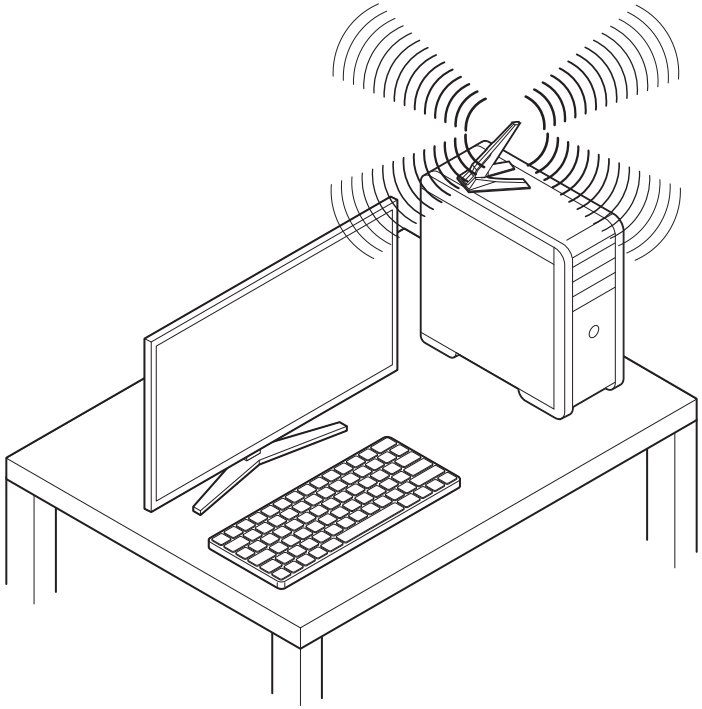

Overview of Components

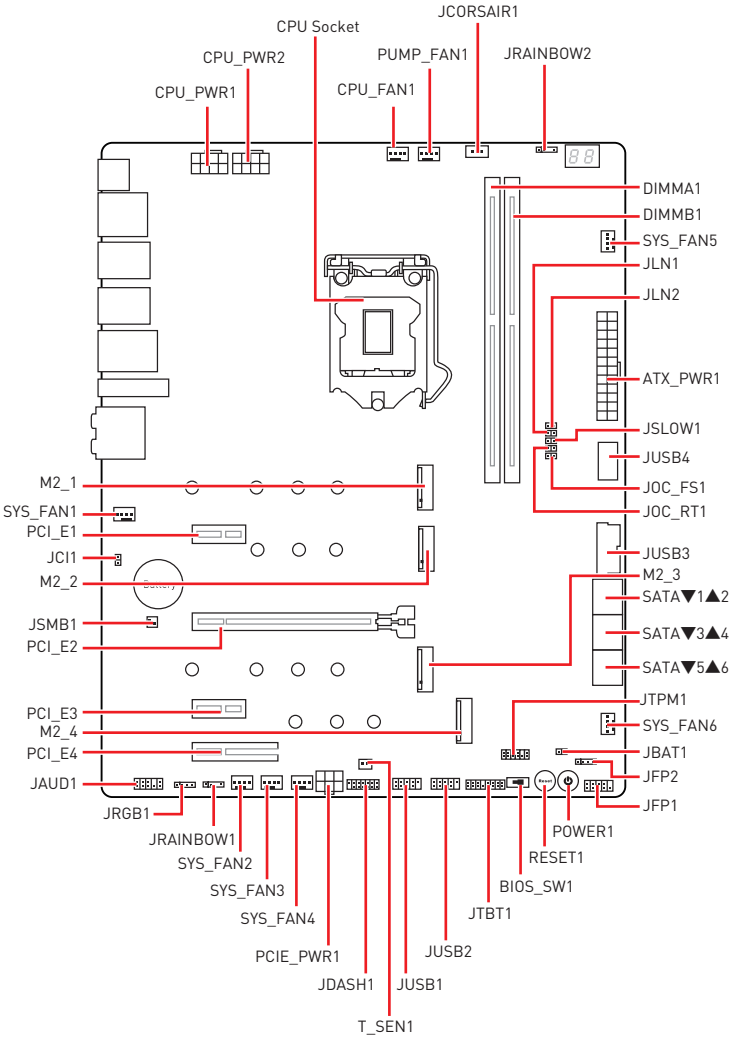

Component Contents

Port Name	Port Type	Page
BIOS_SW1	Multi-BIOS Switch	50
CPU_FAN1, PUMP_FAN1, SYS_FAN1~6	Fan Connectors	48
CPU_PWR1~2, ATX_PWR1, PCIE_PWR1	Power Connectors	40
CPU Socket	LGA 1200	32
DIMMA1, DIMMB1	DIMM Slots	33
JAUD1	Front Audio Connector	39
JBAT1	Clear CMOS Jumper	50
JCI1	Chassis Intrusion Connector	49
JCORSAIR1	CORSAIR Connector	53
JDASH1	Tuning Controller connector	44
JFP1, JFP2	Front Panel Connectors	39
JLN1~2	Low Temperature Booting Jumper	41
JOC_FS1	Safe Boot Jumper	42
JOC_RT1	OC Retry Jumper	42
JRAINBOW1~2	Addressable RGB LED connectors	52
JRGB1	RGB LED connector	51
JSLOW1	Slow Mode Booting Jumper	41
JTBT1	Thunderbolt Add-on Card Connector	42
JTPM1	TPM Module Connector	47
JUSB1~2	USB 2.0 Connectors	47
JUSB3	USB 3.2 Gen 1 Connector	46
JUSB4	USB 3.2 Gen 2 Type-C Connector	46
M2_1~4	M.2 Slots (Key M)	36
PCI_E1~4	PCIe Expansion Slots	34
POWER1, RESET1	Power Button, Reset Button	49
SATA1~6	SATA 6Gb/s Connectors	38
T_SEN1	Thermal Sensor Connectors	43

CPU Socket

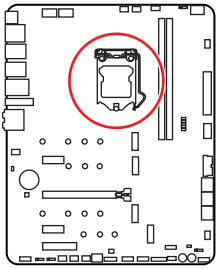

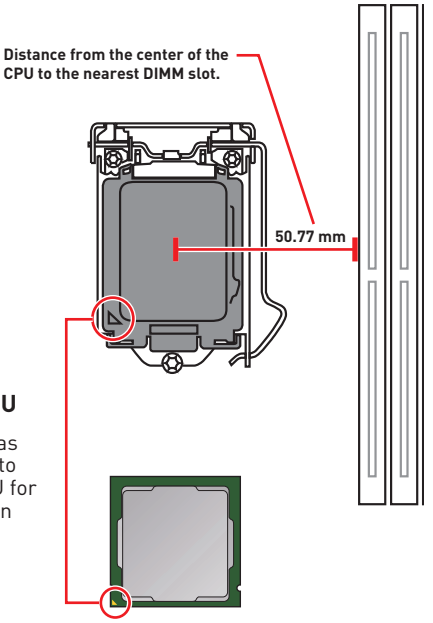

Introduction to the LGA 1200 CPU

The surface of the LGA 1200 CPU has two **notches** and a **golden triangle** to assist in correctly lining up the CPU for motherboard placement. The golden triangle is the Pin 1 indicator.

Important

- *Always unplug the power cord from the power outlet before installing or removing the CPU.*
- *Please retain the CPU protective cap after installing the processor. MSI will deal with Return Merchandise Authorization (RMA) requests if only the motherboard comes with the protective cap on the CPU socket.*
- *When installing a CPU, always remember to install a CPU heatsink. A CPU heatsink is necessary to prevent overheating and maintain system stability.*
- *Confirm that the CPU heatsink has formed a tight seal with the CPU before booting your system.*
- *Overheating can seriously damage the CPU and motherboard. Always make sure the cooling fans work properly to protect the CPU from overheating. Be sure to apply an even layer of thermal paste (or thermal tape) between the CPU and the heatsink to enhance heat dissipation.*
- *Whenever the CPU is not installed, always protect the CPU socket pins by covering the socket with the plastic cap.*
- *If you purchased a separate CPU and heatsink/ cooler, Please refer to the documentation in the heatsink/ cooler package for more details about installation.*
- *This motherboard is designed to support overclocking. Before attempting to overclock, please make sure that all other system components can tolerate overclocking. Any attempt to operate beyond product specifications is not recommended. MSI® does not guarantee the damages or risks caused by inadequate operation beyond product specifications.*

DIMM Slots

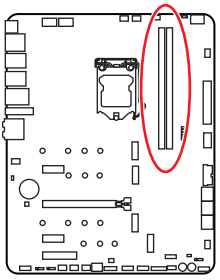

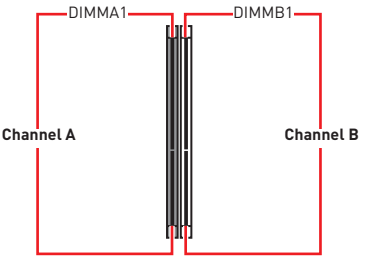

Memory module installation recommendation

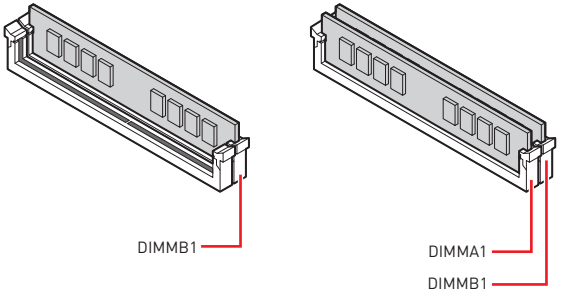

Important

- *Always insert memory modules in the **DIMMB1** slot first.*
- *To ensure system stability for Dual channel mode, memory modules must be of the same type, number and density.*
- *Some memory modules may operate at a lower frequency than the marked value when overclocking due to the memory frequency operates dependent on its Serial Presence Detect (SPD). Go to BIOS and find the **DRAM Frequency** to set the memory frequency if you want to operate the memory at the marked or at a higher frequency.*
- *It is recommended to use a more efficient memory cooling system for full DIMMs installation or overclocking.*
- *The stability and compatibility of installed memory module depend on installed CPU and devices when overclocking.*
- *Please refer www.msi.com for more information on compatible memory.*

PCI_E1~4: PCIe Expansion Slots

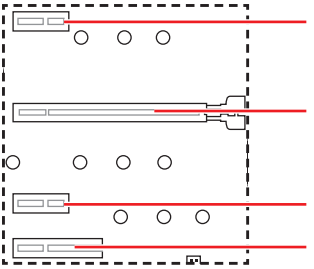

PCI_E1: PCIe 3.0 x1 (From Z590 chipset)

PCI_E2: PCIe 4.0 x16 (From CPU)

PCI_E3: PCIe 3.0 x1 (From Z590 chipset)

PCI_E4: PCIe 3.0 x4 (From Z590 chipset)

Important

- *If you install a large and heavy graphics card, you need to use a tool such as **MSI Gaming Series Graphics Card Bolster** to support its weight to prevent deformation of the slot.*
- *For a single PCIe x16 expansion card installation with optimum performance, using the **PCI_E2** slot is recommended.*
- *When adding or removing expansion cards, always turn off the power supply and unplug the power supply power cable from the power outlet. Read the expansion card's documentation to check for any necessary additional hardware or software changes.*
- *PCI_E2 will only support x8 speed, when M2_2 and M2_3 are from CPU.*
- *PCI_E4 and M2_4 share the same bandwidth, if you want to use both of them simultaneously, the PCI_E4 will only support x1 speed and the M2_4 will only support x2 speed. But if you want to install and enable the graphics card in PCI_E4 slot, the M2_4 slot should be empty.*

PCIe bandwidth configuration table for PCIe & M.2 slots

The M2_2 and M2_3 slots can be used under two PCIe bandwidth modes: Chipset mode (default) and CPU mode (by BIOS setting). Please refer the PCIe bandwidth configuration table below for details.

Slot	Chipset mode (Default)			CPU mode (By BIOS setting)		
PCI_E1	3.0 x1			3.0 x1		
PCI_E2	4.0* x16 or 3.0 x16			4.0* x8 or 3.0 x8		
PCI_E3	3.0 x1			3.0 x1		
PCI_E4	—	3.0 x4	3.0 x1	—	3.0 x4	3.0 x1
M2_1	4.0 x4 (M2_1 slot is available only on 11th Gen Intel® CPU)					
M2_2	3.0 x4			4.0* x4 or 3.0 x4		
M2_3	3.0 x4			4.0* x4 or 3.0 x4		
M2_4	3.0 x4	—	3.0 x2	3.0 x4	—	3.0 x2

(—: unavailable)

* PCIe 4.0 specification is available only on 11th Gen Intel® CPU.

Important

*Enabling **CPU mode** for M2_2 & M2_3 slots, please go to **BIOS > SETTINGS > Advanced > PCIe/PCI sub-system Settings > CPU PCIe Lanes Configuration** and configure the PCIe Lanes to **x8/x4/x4** for PCI_E2, M2_2 and M2_3 slots first. In **CPU mode**, the PCI_E2, M2_2 and M2_3 slots share the same PCIe bandwidth.*

M2_1~4: M.2 Slots (Key M)

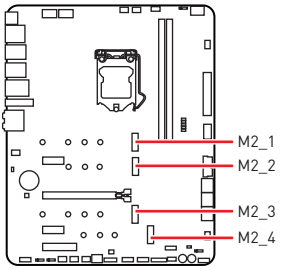

Video Demonstration

Watch the video to learn how to Install M.2 SSD.

https://youtu.be/2UeWMgjwogU

Important

- *Intel® RST only supports PCIe M.2 SSD with UEFI ROM.*
- *Intel® Optane™ Memory Ready for M2_2 (from chipset), M2_3 (from chipset) and M2_4 slot.*

Installing M.2 module

1. Loosen the screws of M.2 SHIELD FROZR heatsink.
2. Remove the M.2 SHIELD FROZR and remove the protective films from the thermal pads of heatsink.

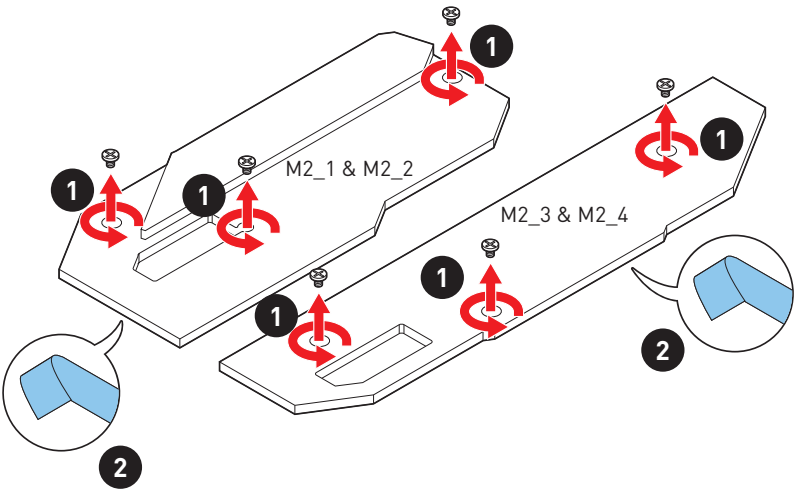

3. Secure the supplied M.2 standoff according to your M.2 SSD length if need.
4. Insert your M.2 SSD into the M.2 slot at a 30-degree angle.
5. Secure the M.2 SSD in place with the supplied M.2 8.5H screw.

Important

Skip step 3 and step 5, if you install 22110 M.2 SSD into M2_1 and M2_3 slots or 2280 M.2 SSD into M2_2 and M2_4 slots.

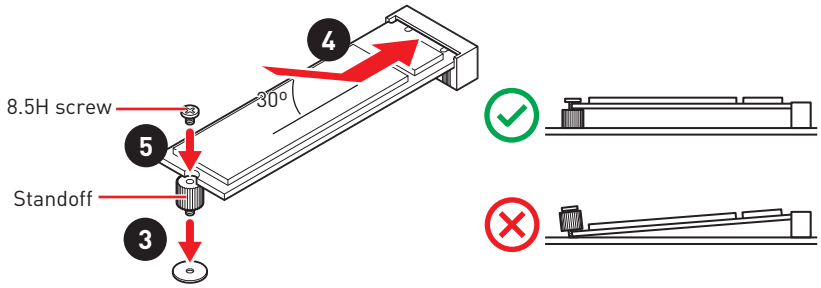

6. Put the M.2 SHIELD FROZR heatsink back in place and secure it.

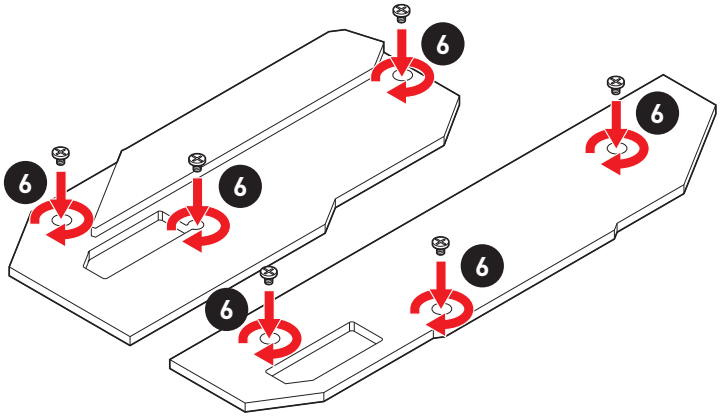

SATA1~6: SATA 6Gb/s Connectors

These connectors are SATA 6Gb/s interface ports. Each connector can connect to one SATA device.

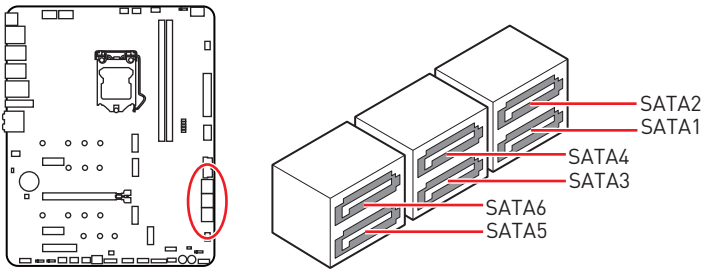

Important

- *Please do not fold the SATA cable at a 90-degree angle. Data loss may result during transmission otherwise.*
- *SATA cables have identical plugs on either sides of the cable. However, it is recommended that the flat connector be connected to the motherboard for space saving purposes.*
- *SATA2 will be unavailable when installing M.2 SATA SSD in the M2_2 slot.*
- *SATA5 & SATA6 will be unavailable when installing M.2 SSD in the M2_2 or M2_3 slot.*

M.2 & SATA combination table

Slot	Available SATA connectors					
M2_1	PCIe (Only Intel 11th Gen processors support M2_1 slot)					
M2_2	PCIe	SATA	PCIe	SATA	PCIe	SATA
M2_3	PCIe	PCIe	SATA	SATA	—	—
M2_4	M2_4 slot supports PCIe only					
SATA1	✓	✓	✓	✓	✓	✓
SATA2	✓	—	✓	—	✓	—
SATA3	✓	✓	✓	✓	✓	✓
SATA4	✓	✓	✓	✓	✓	✓
SATA5	—	—	—	—	—	—
SATA6	—	—	—	—	—	—

(**SATA**: M.2 SATA SSD, **PCIe**: M.2 PCIe SSD, ✓: available, —: unavailable)

JFP1, JFP2: Front Panel Connectors

These connectors connect to the switches and LEDs on the front panel.

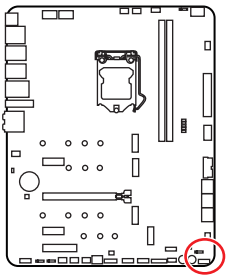

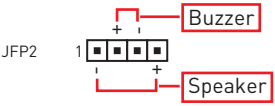

1	Speaker -	2	Buzzer +
3	Buzzer -	4	Speaker +

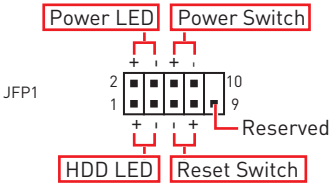

1	HDD LED +	2	Power LED +
3	HDD LED -	4	Power LED -
5	Reset Switch	6	Power Switch
7	Reset Switch	8	Power Switch
9	Reserved	10	No Pin

JAUD1: Front Audio Connector

This connector allows you to connect audio jacks on the front panel.

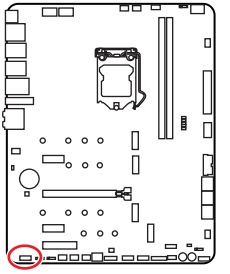

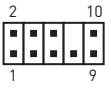

1	MIC L	2	Ground
3	MIC R	4	NC
5	Head Phone R	6	MIC Detection
7	SENSE_SEND	8	No Pin
9	Head Phone L	10	Head Phone Detection

CPU_PWR1~2, ATX_PWR1, PCIE_PWR1: Power Connectors

These connectors allow you to connect an ATX power supply.

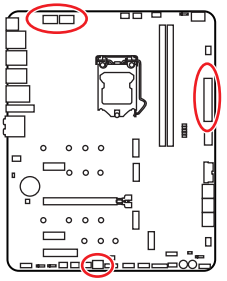

8 4 5 1 CPU_PWR1~2

1	Ground	5	+12V
2	Ground	6	+12V
3	Ground	7	+12V
4	Ground	8	+12V

12 24 ATX_PWR1 1 13

1	+3.3V	13	+3.3V
2	+3.3V	14	-12V
3	Ground	15	Ground
4	+5V	16	PS-ON#
5	Ground	17	Ground
6	+5V	18	Ground
7	Ground	19	Ground
8	PWR OK	20	Res
9	5VSB	21	+5V
10	+12V	22	+5V
11	+12V	23	+5V
12	+3.3V	24	Ground

1 3 PCIE_PWR1 4 6

1	+12V	4	Ground
2	+12V	5	Ground
3	+12V	6	Ground

Important

Make sure that all the power cables are securely connected to a proper ATX power supply to ensure stable operation of the motherboard.

JSLOW1: Slow Mode Booting Jumper

This jumper is used for LN2 cooling solution, that provides the extreme overclocking conditions, to boot at a stable processor frequency and to prevent the system from crashing.

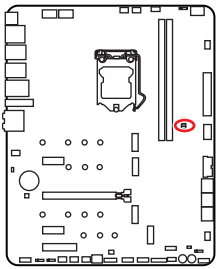



Normal
(Default)



Enabled

(Please enable this jumper during BIOS POST.)

JLN1~2: Low Temperature Booting Jumper

This jumper is used for liquid nitrogen cooling system to boot at an extreme low temperature. Try to set it Enabled to increase the boot success rate.

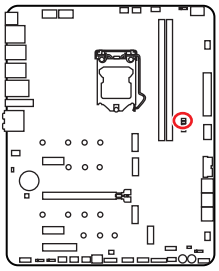



Normal
(Default)



Enabled

(Please enable this jumper during BIOS POST.)

Important

- *Users will try extreme low temperature overclocking at their own risks. The overclocking results will vary according to the CPU version.*
- *Please don't set to **Enabled** when power-off or the system will be un-bootable.*

JOC_FS1: Safe Boot Jumper

This jumper is used for Safe Boot. Once enabled, the system will boot with default settings and lower PCIe (from CPU) mode.

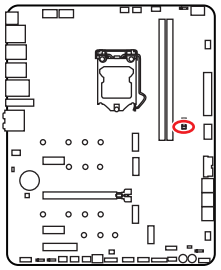



Normal
(default)

Boot with the saved BIOS settings.



Enabled

Apply the BIOS default settings and lower PCIe (from CPU) mode for Safe Boot

JOC_RT1: OC Retry Jumper

This jumper is used for retrying OC. Once set this jumper to short, the system will keep retrying OC items until it boot up successfully.

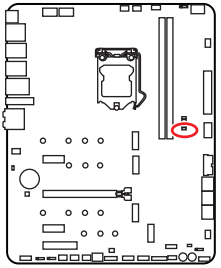



Normal
(default)



Short
(Retry OC)

JTBT1: Thunderbolt Add-on Card Connector

This connector allows you to connect the add-on Thunderbolt I/O card.

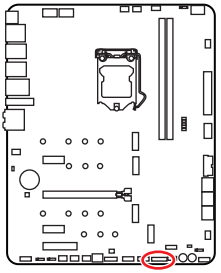



1	TBT_Force_PWR	2	TBT_S0IX_Entry_REQ
3	TBT_CIO_Plug_Event#	4	TBT_S0IX_Entry_ACK
5	SLP_S3#_TBT	6	TBT_PSON_Override_N
7	SLP_S5#_TBT	8	No pin
9	Ground	10	SMBCLK_VSB
11	DG_PEWake	12	SMBDATA_VSB
13	TBT_RTD3_PWR_EN	14	Ground
15	TBT_Card_DET_R#	16	PD_IRQ#

V-Check Points Lite

These voltage checkpoints are used to measure the current system voltages. A multimeter (not included) will be required to check voltages. To measure voltage, place test leads on the GND (screw mounting hole) and a specific V-Check Point. Please refer to the manual of your multimeter for more information.

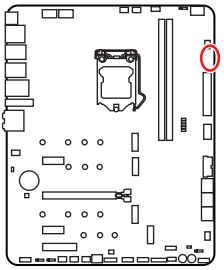

- GND
- VCCIO
- VCCSA
- DRAM
- VCORE
- VCCIO2

T_SEN1: Thermal Sensor Connectors

This connector allows you to connect the thermistor cable and use it to monitor the temperature of the detection point.

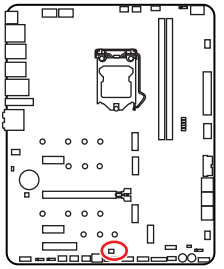

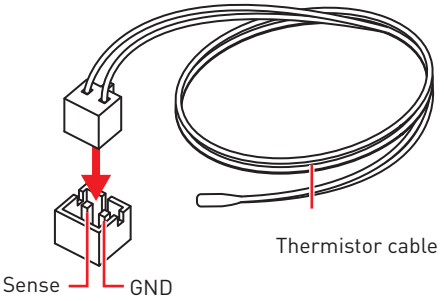

JDASH1 : Tuning Controller connector

This connector is used to connect an optional Tuning Controller module.

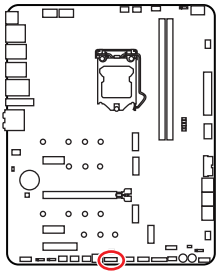

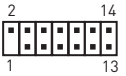

1	No Pin	2	NC
3	MCU_SMB_SCL_M	4	MCU_SMB_SDA_M
5	VCC5	6	Ground
7	PSIN#_R	8	FP_RST#_R
9	OC_RETRY#	10	OC_FS
11	BLK+	12	BLK-
13	CLRCMOS_EN	14	NC

Connecting the JDASH1 and Tuning Controller module

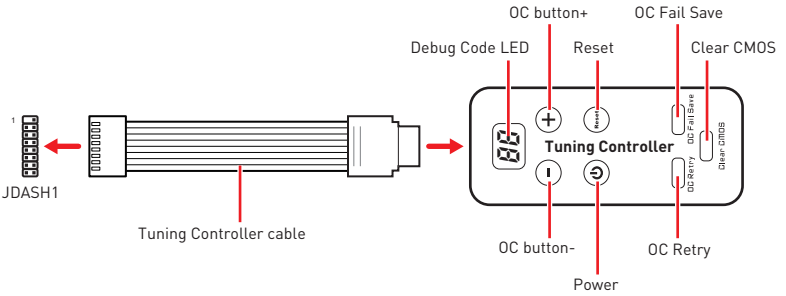

Using Tuning Controller

Tuning controller is a multiple functions module that helps you to monitor, control and overclock the motherboard more easily. Please follow the instructions below to understand the function of each button on the module.

• **Debug Code LED** - it displays CPU core temperature (default), progress and error codes during and after POST. Please refer to the Debug Code LED table in this manual for details.

• **OC button- / +** - these buttons are used to decrease/ increase the CPU base clock/ CPU ratio. Please go to **BIOS > OC > Direct OC Button** and select the CPU BCLK or CPU Ratio to be overclocked.

• **Reset** - this button allows you to reset the computer.

• **Power** - this button allows you to power on and off the computer.

• **OC Fail Save** - press and hold the button and start the system simultaneously to boot in Safe Boot mode. The system will boot with default and lower the PCIe (from CPU) mode.

• **OC Retry** - press and hold this button for retrying OC settings until the system boot up successfully.

• **Clear CMOS** - power off the computer and than long press this button for 5-10 seconds to reset BIOS with defaults.

Tuning Controller module magnet

Tuning controller module has build in some magnets on both sides that will be convenient for you to stick it to the chassis. However, we provide extra four magnets for sticking inside the back cover of module. Please follow the instructions below to stick the magnets.

1. Loosen the screws of the back cover.
2. Open and turn the back cover over.

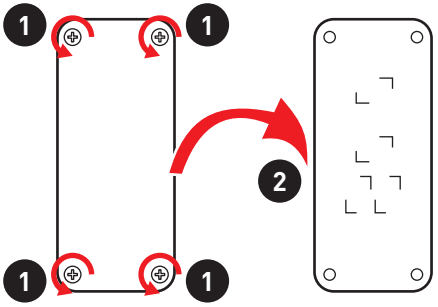

3. Remove the sticker from the magnet.
4. Stick four magnets to the designated four locations.
5. Reinstall the back cover in correct direction.

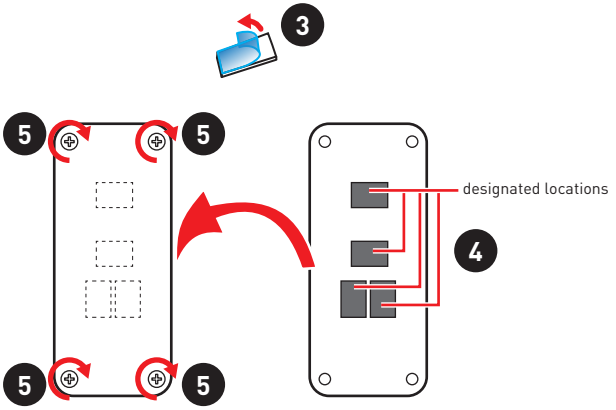

Please note that wrong mounting direction of the back cover will affect the circuit of the module and may damage the module.

JUSB4: USB 3.2 Gen 2 Type-C Connector

This connector allows you to connect USB 3.2 Gen 2 Type-C connector on the front panel. The connector possesses a foolproof design. When you connect the cable, be sure to connect it with the corresponding orientation.

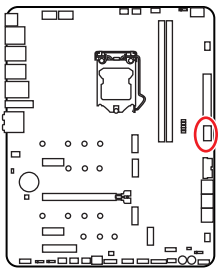

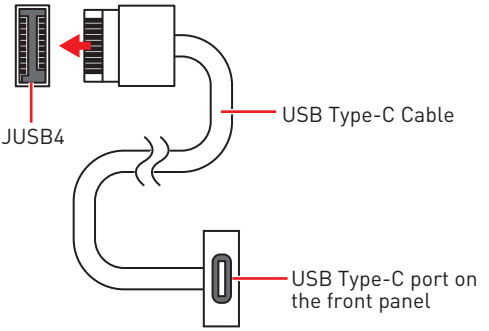

JUSB3: USB 3.2 Gen 1 Connector

This connector allows you to connect USB 3.2 Gen 1 5Gbps ports on the front panel.

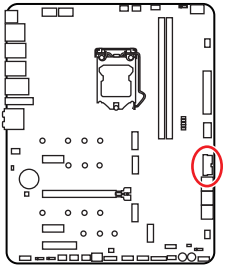

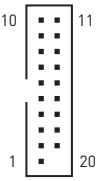

1	Power	11	USB2.0+
2	USB3_RX_DN	12	USB2.0-
3	USB3_RX_DP	13	Ground
4	Ground	14	USB3_TX_C_DP
5	USB3_TX_C_DN	15	USB3_TX_C_DN
6	USB3_TX_C_DP	16	Ground
7	Ground	17	USB3_RX_DP
8	USB2.0-	18	USB3_RX_DN
9	USB2.0+	19	Power
10	Ground	20	No Pin

Important

Note that the Power and Ground pins must be connected correctly to avoid possible damage.

JUSB1~2: USB 2.0 Connectors

These connectors allow you to connect USB 2.0 ports on the front panel.

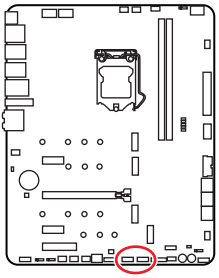

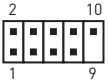

1	VCC	2	VCC
3	USB0-	4	USB1-
5	USB0+	6	USB1+
7	Ground	8	Ground
9	No Pin	10	NC

Important

- *Note that the VCC and Ground pins must be connected correctly to avoid possible damage.*
- *In order to recharge your iPad,iPhone and iPod through USB ports, please install MSI® Center utility.*

JTPM1: TPM Module Connector

This connector is for TPM (Trusted Platform Module). Please refer to the TPM security platform manual for more details and usages.

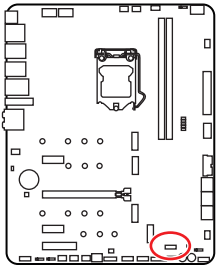

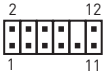

1	SPI Power	2	SPI Chip Select
3	Master In Slave Out (SPI Data)	4	Master Out Slave In (SPI Data)
5	Reserved	6	SPI Clock
7	Ground	8	SPI Reset
9	Reserved	10	No Pin
11	Reserved	12	Interrupt Request

CPU_FAN1, PUMP_FAN1, SYS_FAN1~6: Fan Connectors

Fan connectors can be classified as PWM (Pulse Width Modulation) Mode or DC Mode. PWM Mode fan connectors provide constant 12V output and adjust fan speed with speed control signal. DC Mode fan connectors control fan speed by changing voltage. The auto mode fan connectors can automatically detect PWM and DC mode. However, you can follow the instruction below to adjust the fan connector to PWM or DC Mode manually.

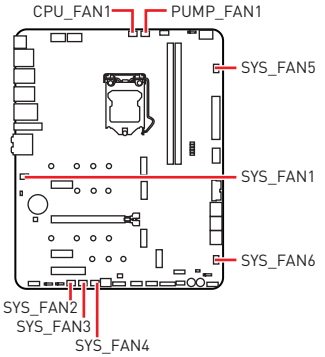

Connector	Default fan mode	Max. current	Max. power
CPU_FAN1	Auto mode	2A	24W
PUMP_FAN1	PWM mode	3A	36W
SYS_FAN1~6	Auto mode	1A	12W

Switching fan mode and adjusting fan speed

You can switch between PWM mode and DC mode and adjust fan speed in **BIOS > HARDWARE MONITOR**.

Select **PWM** mode or **DC** mode

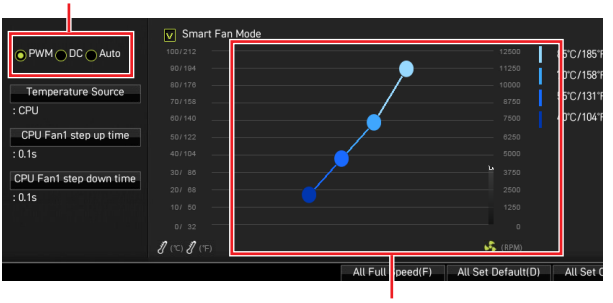

There are gradient points of the fan speed that allow you to adjust fan speed in relation to CPU temperature.

Important

Make sure fans are working properly after switching the PWM/ DC mode.

Pin definition of fan connectors

1 PWM Mode pin definition			
1	Ground	2	+12V
3	Sense	4	Speed Control Signal

1 DC Mode pin definition			
1	Ground	2	Voltage Control
3	Sense	4	NC

JCI1: Chassis Intrusion Connector

This connector allows you to connect the chassis intrusion switch cable.

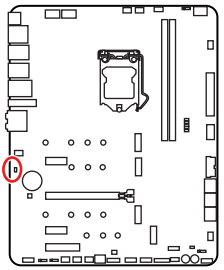



Normal (default)



Trigger the chassis intrusion event

Using chassis intrusion detector

1. Connect the **JCI1** connector to the chassis intrusion switch/ sensor on the chassis.
2. Close the chassis cover.
3. Go to **BIOS > SETTINGS > Security > Chassis Intrusion Configuration**.
4. Set **Chassis Intrusion** to **Enabled**.
5. Press **F10** to save and exit and then press the **Enter** key to select **Yes**.
6. Once the chassis cover is opened again, a warning message will be displayed on screen when the computer is turned on.

Resetting the chassis intrusion warning

1. Go to **BIOS > SETTINGS > Security > Chassis Intrusion Configuration**.
2. Set **Chassis Intrusion** to **Reset**.
3. Press **F10** to save and exit and then press the **Enter** key to select **Yes**.

POWER1, RESET1: Power Button, Reset Button

The Power / Reset button allows you to power on / reset the computer.

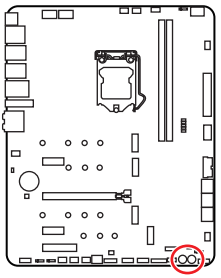



Reset button



Power button

JBAT1: Clear CMOS (Reset BIOS) Jumper

There is CMOS memory onboard that is external powered from a battery located on the motherboard to save system configuration data. If you want to clear the system configuration, set the jumpers to clear the CMOS memory.

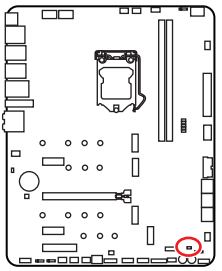



Keep Data
(default)



Clear CMOS/
Reset BIOS

Resetting BIOS to default values

1. Power off the computer and unplug the power cord.
2. Use a jumper cap to short **JBAT1** for about 5-10 seconds.
3. Remove the jumper cap from **JBAT1**.
4. Plug the power cord and Power on the computer.

BIOS_SW1: Multi-BIOS Switch

This motherboard has two built-in BIOS ROMs. If one is crashed, you can shift to the other for booting by sliding the switch. And the multi BIOS LED indicates which BIOS ROM is in operation.

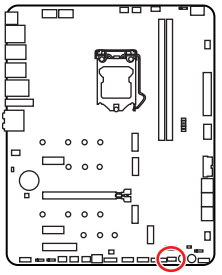

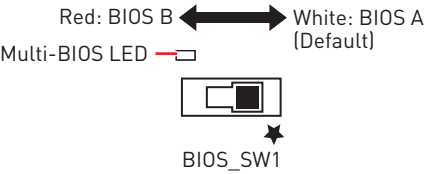

Important

Do not use the Multi-BIOS switch when system is booting up.

JRGB1: RGB LED connector

The JRGB connector allows you to connect the 5050 RGB LED strips 12V.

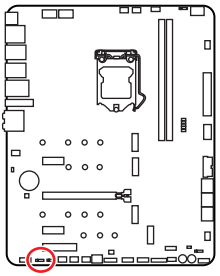

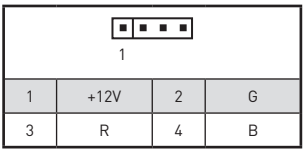

RGB LED Strip Connection

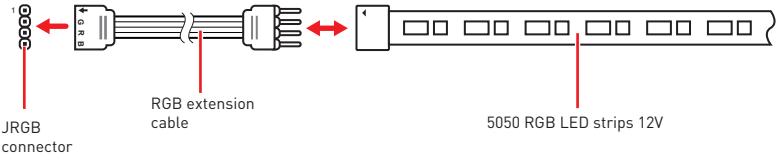

RGB LED Fan Connection

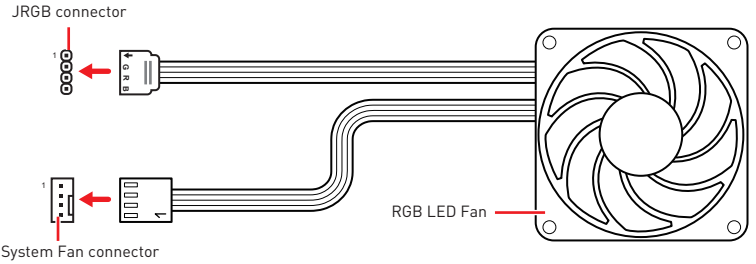

Important

- *The JRGB connector supports up to 2 meters continuous 5050 RGB LED strips (12V/G/R/B) with the maximum power rating of 3A (12V).*
- *Always turn off the power supply and unplug the power cord from the power outlet before installing or removing the RGB LED strip.*
- *Please use MSI's software to control the extended LED strip.*

JRAINBOW1~2: Addressable RGB LED connectors

The JRAINBOW connectors allow you to connect the WS2812B Individually Addressable RGB LED strips 5V.

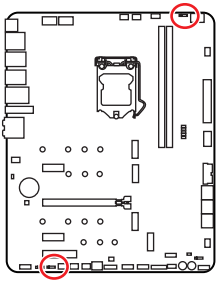

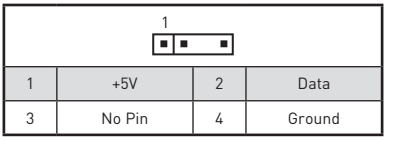

1	+5V	2	Data
3	No Pin	4	Ground

Addressable RGB LED Strip Connection

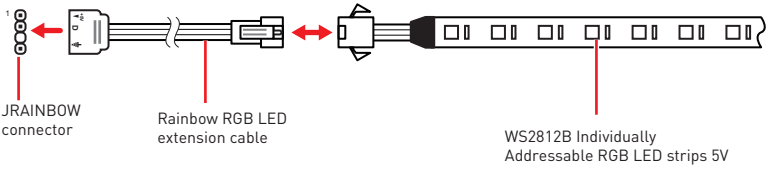

Addressable RGB LED Fan Connection

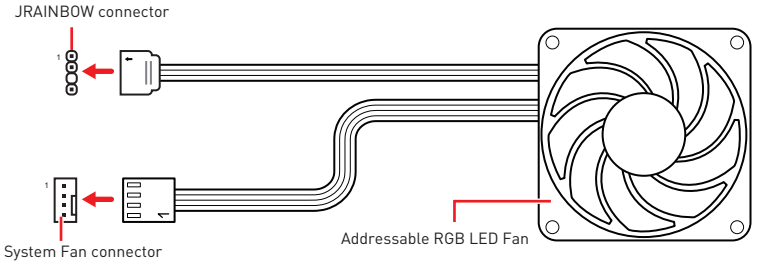

CAUTION

Do not connect the wrong type of LED strips. The JRGB connector and the JRAINBOW connector provide different voltages, and connecting the 5V LED strip to the JRGB connector will result in damage to the LED strip.

Important

- *The JRAINBOW connector supports up to 75 LEDs WS2812B Individually Addressable RGB LED strips (5V/Data/Ground) with the maximum power rating of 3A (5V). In the case of 20% brightness, the connector supports up to 200 LEDs.*
- *Always turn off the power supply and unplug the power cord from the power outlet before installing or removing the RGB LED strip.*
- *Please use MSI's software to control the extended LED strip.*

JCORSAIR1: CORSAIR Connector

The JCORSAIR1 connector allows you to connect the CORSAIR Individually Addressable Lighting PRO RGB LED strips 5V or CORSAIR RGB fans with the CORSAIR fan hub. Once all items are connected properly, you can control the CORSAIR RGB LED strips and fans with MSI's software.

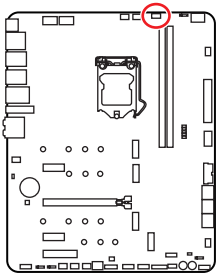

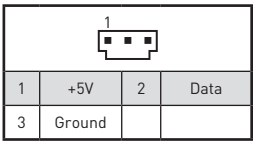

1	+5V	2	Data
3	Ground		

CORSAIR RGB Fan Connection

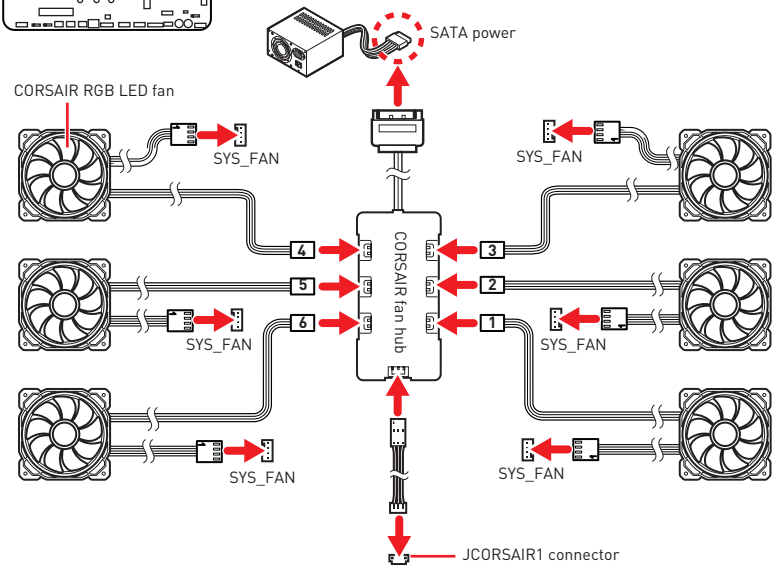

CORSAIR Lighting Node PRO Connection

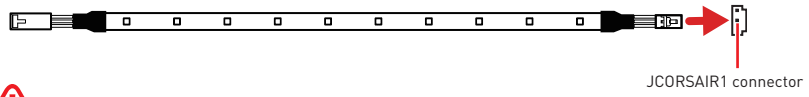

Important

- *Fans must start at 1 and continue in series. 1 > 2 > 3 > 4 > 5 > 6. Any fan not connected in series will break communication and the RGB LED lighting function will not work.*
- *Quantity of RGB LED Fans or RGB LED Lighting PRO strips supported may differ between models. Please refer to the motherboard specification.*
- *CORSAIR RGB LED Fan and CORSAIR Lighting Node PRO can't be used at the same time.*

Onboard LEDs

EZ Debug LED

These LEDs indicate the debug status of the motherboard.

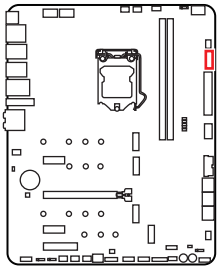

- **CPU** - indicates CPU is not detected or fail.
- **DRAM** - indicates DRAM is not detected or fail.
- **VGA** - indicates GPU is not detected or fail.
- **BOOT** - indicates the booting device is not detected or fail.

XMP LED

This LED indicates the XMP (Extreme Memory Profile) mode is enabled.

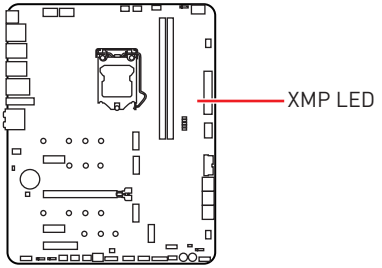

Debug Code LED

The Debug Code LED displays CPU core temperature (default), progress and error codes during and after POST. Refer to the Debug Code LED table for details.

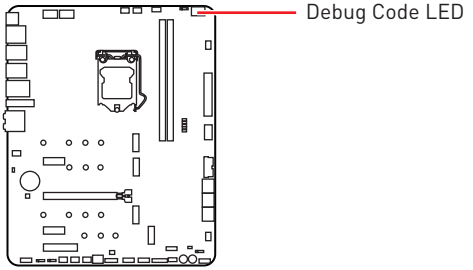

Hexadecimal Character Table

Hexadecimal	0	1	2	3	4	5	6	7	8	9	A	B	C	D	E	F
Debug Code LED display																

Boot Phases

Security (SEC) – initial low-level initialization

Pre-EFI Initialization (PEI) – memory initialization

Driver Execution Environment (DXE) – main hardware initialization

Boot Device Selection (BDS) – system setup, pre-OS user interface & selecting a bootable device (CD/DVD, HDD, USB, Network, Shell, ...)

Debug Code LED Table

SEC Progress Codes

01	Power on. Reset type detection (soft/hard)
02	AP initialization before microcode loading
03	System Agent initialization before microcode loading
04	PCH initialization before microcode loading
06	Microcode loading
07	AP initialization after microcode loading
08	System Agent initialization after microcode loading
09	PCH initialization after microcode loading
0B	Cache initialization

SEC Error Codes

0C - 0D	Reserved for future AMI SEC error codes
0E	Microcode not found
0F	Microcode not loaded

PEI Progress Codes

10	PEI Core is started
11	Pre-memory CPU initialization is started
12 - 14	Pre-memory CPU initialization (CPU module specific)
15	Pre-memory System Agent initialization is started
16 - 18	Pre-Memory System Agent initialization (System Agent module specific)
19	Pre-memory PCH initialization is started
1A - 1C	Pre-memory PCH initialization (PCH module specific)
2B	Memory initialization. Serial Presence Detect (SPD) data reading
2C	Memory initialization. Memory presence detection
2D	Memory initialization. Programming memory timing information

2E	Memory initialization. Configuring memory
2F	Memory initialization (other)
31	Memory Installed
32	CPU post-memory initialization is started
33	CPU post-memory initialization. Cache initialization
34	CPU post-memory initialization. Application Processor(s) (AP) initialization
35	CPU post-memory initialization. Boot Strap Processor (BSP) selection
36	CPU post-memory initialization. System Management Mode (SMM) initialization
37	Post-Memory System Agent initialization is started
38 - 3A	Post-Memory System Agent initialization (System Agent module specific)
3B	Post-Memory PCH initialization is started
3C - 3E	Post-Memory PCH initialization (PCH module specific)
4F	DXE IPL is started

PEI Error Codes

50	Memory initialization error. Invalid memory type or incompatible memory speed
51	Memory initialization error. SPD reading has failed
52	Memory initialization error. Invalid memory size or memory modules do not match
53	Memory initialization error. No usable memory detected
54	Unspecified memory initialization error
55	Memory not installed
56	Invalid CPU type or Speed
57	CPU mismatch
58	CPU self test failed or possible CPU cache error
59	CPU micro-code is not found or micro-code update is failed
5A	Internal CPU error
5B	Reset PPI is not available
5C - 5F	Reserved for future AMI error codes

DXE Progress Codes

60	DXE Core is started
61	NVRAM initialization
62	Installation of the PCH Runtime Services
63	CPU DXE initialization is started
64 - 67	CPU DXE initialization (CPU module specific)
68	PCI host bridge initialization
69	System Agent DXE initialization is started
6A	System Agent DXE SMM initialization is started
6B - 6F	System Agent DXE initialization (System Agent module specific)
70	PCH DXE initialization is started

71	PCH DXE SMM initialization is started
72	PCH devices initialization
73 - 77	PCH DXE Initialization (PCH module specific)
78	ACPI module initialization
79	CSM initialization
7A - 7F	Reserved for future AMI DXE codes
90	Boot Device Selection (BDS) phase is started
91	Driver connecting is started
92	PCI Bus initialization is started
93	PCI Bus Hot Plug Controller Initialization
94	PCI Bus Enumeration 32
95	PCI Bus Request Resources
96	PCI Bus Assign Resources
97	Console Output devices connect
98	Console input devices connect
99	Super IO Initialization
9A	USB initialization is started
9B	USB Reset
9C	USB Detect
9D	USB Enable
9E -9F	Reserved for future AMI codes
A0	IDE initialization is started
A1	IDE Reset
A2	IDE Detect
A3	IDE Enable
A4	SCSI initialization is started
A5	SCSI Reset
A6	SCSI Detect
A7	SCSI Enable
A8	Setup Verifying Password
A9	Start of Setup
AB	Setup Input Wait
AD	Ready To Boot event
AE	Legacy Boot event
AF	Exit Boot Services event
B0	Runtime Set Virtual Address MAP Begin
B1	Runtime Set Virtual Address MAP End
B2	Legacy Option ROM Initialization
B3	System Reset

B4	USB hot plug
B5	PCI bus hot plug
B6	Clean-up of NVRAM
B7	Configuration Reset (reset of NVRAM settings)
B8 - BF	Reserved for future AMI codes

DXE Error Codes

D0	CPU initialization error
D1	System Agent initialization error
D2	PCH initialization error
D3	Some of the Architectural Protocols are not available
D4	PCI resource allocation error. Out of Resources
D5	No Space for Legacy Option ROM
D6	No Console Output Devices are found
D7	No Console Input Devices are found
D8	Invalid password
D9	Error loading Boot Option (LoadImage returned error)
DA	Boot Option is failed (StartImage returned error)
DB	Flash update is failed
DC	Reset protocol is not available

S3 Resume Progress Codes

E0	S3 Resume is stared (S3 Resume PPI is called by the DXE IPL)
E1	S3 Boot Script execution
E2	Video repost
E3	OS S3 wake vector call
E4 - E7	Reserved for future AMI progress codes

S3 Resume Error Codes

E8	S3 Resume Failed
E9	S3 Resume PPI not Found
EA	S3 Resume Boot Script Error
EB	S3 OS Wake Error
EC - EF	Reserved for future AMI error codes

Recovery Progress Codes

F0	Recovery condition triggered by firmware (Auto recovery)

F1	Recovery condition triggered by user (Forced recovery)
F2	Recovery process started
F3	Recovery firmware image is found
F4	Recovery firmware image is loaded
F5 - F7	Reserved for future AMI progress codes

Recovery Error Codes

F8	Recovery PPI is not available
F9	Recovery capsule is not found
FA	Invalid recovery capsule
FB - FF	Reserved for future AMI error codes

ACPI States Codes

The following codes appear after booting and the operating system into ACPI modes.

01	System is entering S1 sleep state
02	System is entering S2 sleep state
03	System is entering S3 sleep state
04	System is entering S4 sleep state
05	System is entering S5 sleep state
10	System is waking up from the S1 sleep state
20	System is waking up from the S2 sleep state
30	System is waking up from the S3 sleep state
40	System is waking up from the S4 sleep state
AC	System has transitioned into ACPI mode. Interrupt controller is in PIC mode.
AA	System has transitioned into ACPI mode. Interrupt controller is in APIC mode.

CPU Temperature

00 - 99	Displays current CPU temperature after the system has fully booted into the OS.

Installing OS, Drivers & MSI Center

Please download and update the latest utilities and drivers at www.msi.com

Installing Windows® 10

1. Power on the computer.
2. Insert the Windows® 10 installation disc/USB into your computer.
3. Press the **Restart** button on the computer case.
4. Press **F11** key during the computer POST (Power-On Self Test) to get into Boot Menu.
5. Select the Windows® 10 installation disc/USB from the Boot Menu.
6. Press any key when screen shows **Press any key to boot from CD or DVD...** message.
7. Follow the instructions on the screen to install Windows® 10.

Installing Drivers

1. Start up your computer in Windows® 10.
2. Insert MSI® USB Drive into the USB port.
3. Click the **Select to choose what happens with this disc** pop-up notification, then select **Run DVDSetup.exe** to open the installer. If you turn off the AutoPlay feature from the Windows Control Panel, you can still manually execute the **DVDSetup.exe** from the root path of the MSI USB Drive.
4. The installer will find and list all necessary drivers in the **Drivers/Software** tab.
5. Click the **Install** button in the lower-right corner of the window.
6. The drivers installation will then be in progress, after it has finished it will prompt you to restart.
7. Click **OK** button to finish.
8. Restart your computer.

MSI Center

MSI Center is an application that helps you easily optimize game settings and smoothly use content creation softwares. It also allows you to control and synchronize LED light effects on PCs and other MSI products. With MSI Center, you can customize ideal modes, monitor system performance, and adjust fan speed.

MSI Center User Guide

If you would like to know more information about MSI Center, please refer to

http://download.msi.com/manual/mb/MSICENTER.pdf

or scan the QR code to access.

Important

Functions may vary depending on the product you have.

UEFI BIOS

MSI UEFI BIOS is compatible with UEFI (Unified Extensible Firmware Interface) architecture. UEFI has many new functions and advantages that traditional BIOS cannot achieve, and it will completely replace BIOS in the future. The MSI UEFI BIOS uses UEFI as the default boot mode to take full advantage of the new chipset's capabilities.

Important

The term BIOS in this user guide refers to UEFI BIOS unless otherwise noted.

UEFI advantages

• Fast booting - UEFI can directly boot the operating system and save the BIOS self-test process. And also eliminates the time to switch to CSM mode during POST.

• Supports for hard drive partitions larger than 2 TB.

• Supports more than 4 primary partitions with a GUID Partition Table (GPT).

• Supports unlimited number of partitions.

• Supports full capabilities of new devices - new devices may not provide backward compatibility.

• Supports secure startup - UEFI can check the validity of the operating system to ensure that no malware tampers with the startup process.

Incompatible UEFI cases

• **32-bit Windows operating system** - this motherboard supports only Windows 10 64-bit operating system.

• **Older graphics card** - the system will detect your graphics card. When display a warning message **There is no GOP (Graphics Output protocol) support detected in this graphics card**.

Important

We recommend that you to replace with a GOP/UEFI compatible graphics card or using integrated graphics from CPU for having normal function.

How to check the BIOS mode?

1. Power on your computer.
2. Press **Delete** key, when the **Press DEL key to enter Setup Menu, F11 to enter Boot Menu** message appears on the screen during the boot process.
3. After entering the BIOS, you can check the **BIOS Mode** at the top of the screen.



BIOS Setup

The default settings offer the optimal performance for system stability in normal conditions. You should **always keep the default settings** to avoid possible system damage or failure booting unless you are familiar with BIOS.

Important

- *BIOS items are continuously update for better system performance. Therefore, the description may be slightly different from the latest BIOS and should be for reference only. You could also refer to the **HELP** information panel for BIOS item description.*
- *The BIOS screens, options and settings will vary depending on your system.*

Entering BIOS Setup

Press **Delete** key, when the **Press DEL key to enter Setup Menu, F11 to enter Boot Menu** message appears on the screen during the boot process.

Function key

F1: General Help list

F2: Add/ Remove a favorite item

F3: Enter Favorites menu

F4: Enter CPU Specifications menu

F5: Enter Memory-Z menu

F6: Load optimized defaults

F7: Switch between Advanced mode and EZ mode

F8: Load Overclocking Profile

F9: Save Overclocking Profile

F10: Save Change and Reset*

F12: Take a screenshot and save it to USB flash drive (FAT/ FAT32 format only).

Ctrl+F: Enter Search page

* When you press F10, a confirmation window appears and it provides the modification information. Select between Yes or No to confirm your choice.

BIOS User Guide

If you'd like to know more instructions on setting up the BIOS, please refer to

http://download.msi.com/manual/mb/Intel500BIOS.pdf

or scan the QR code to access.

Resetting BIOS

You might need to restore the default BIOS setting to solve certain problems. There are several ways to reset BIOS:

- Go to BIOS and press **F6** to load optimized defaults.
- Short the **Clear CMOS** jumper on the motherboard.
- Press the **Clear CMOS** button on the rear I/O panel.

Important

*Be sure the computer is off before clearing CMOS data. Please refer to the **Clear CMOS** jumper/ button section for resetting BIOS.*

Updating BIOS

Updating BIOS with M-FLASH

Before updating:

Please download the latest BIOS file that matches your motherboard model from MSI website. And then save the BIOS file into the USB flash drive.

Updating BIOS:

1. Switch to the target BIOS ROM by Multi-BIOS switch
2. Insert the USB flash drive that contains the update file into the USB port.
3. Please refer the following methods to enter flash mode.

   ▪ Reboot and press **Ctrl + F5** key during POST and click on **Yes** to reboot the system.

   

   ▪ Reboot and press **Del** key during POST to enter BIOS. Click the **M-FLASH** button and click on **Yes** to reboot the system.

   

4. Select a BIOS file to perform the BIOS update process.
5. When prompted click on **Yes** to start recovering BIOS.
6. After the flashing process is 100% completed, the system will reboot automatically.

Updating the BIOS with MSI Center

Before updating:

• Make sure the LAN driver is already installed and the internet connection is set properly.

• Please close all other application software before updating the BIOS.

To update BIOS:

1. Install and launch MSI Center and go to **Support** page.
2. Select **Live Update** and click on **Advance** button.
3. Select the BIOS file and click on **Install** button.
4. The installation reminder will appear, then click the Install button on it.
5. The system will automatically restart to update BIOS.
6. After the flashing process is 100% completed, the system will restart automatically.

Updating BIOS with Flash BIOS Button

1. Please download the latest BIOS file that matches your motherboard model from the MSI® website.
2. Rename the BIOS file to MSI.ROM, and save it to the root of the USB 2.0 storage device.
3. Connect the power supply to **CPU_PWR1** and **ATX_PWR1**. (No need to install CPU and memory.)
4. Plug the USB 2.0 storage device that contains the MSI.ROM file into the **Flash BIOS Port** on the rear I/O panel.
5. Press the **Flash BIOS** Button to flash BIOS, and the LED starts flashing.
6. The LED will be turned off when the process is completed.

Nahimic 3

Nahimic 3 is designed to offer the best audio experience it contains audio effects, microphone effects and Sound Tracker.

Installation and Update

Nahimic 3 is included in the audio driver. If you need to install it or update it, please use the **Driver Disc** with your motherboard or download the driver from MSI's official website.

Audio Tab

From this tab, you can access all of Nahimic 3's audio effects, audio profiles and settings.

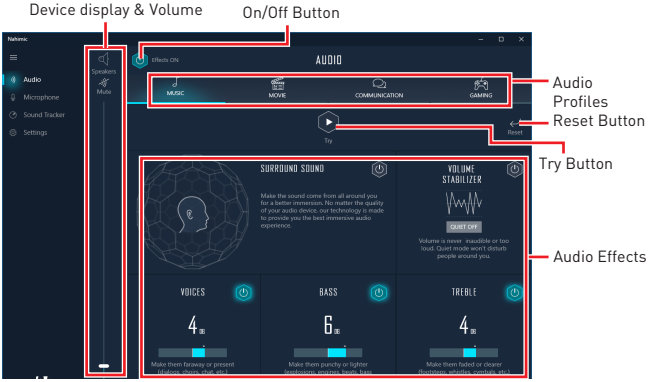

• **Device display & Volume** - displays the type of audio device currently being used as output, as well as its current volume.

  ▪ **Mute** - mutes the current audio output device.

• **Audio profiles** - allows you to choose between 4 factory audio profiles to fit your multimedia experience (Music, Gaming, Movie or Communication). All profiles can be modified as you wish.

• **On/Off Button** - allows you to turn all of Nahimic 3's audio effects in one click.

• **Audio Effects** - allows you to separately control any of the 5 audio effects.

  ▪ **Surround Sound** - it is an audio effect mainly dedicated to headphones acoustic experience.

    ▫ **Gaming and Movies** - virtualizes the multichannel audio stream from the game engine or the movie soundtrack and downmixes it in order to retrieve a multichannel listening experience over your stereo headphones or speakers.

    ▫ **Music** - expands the stereo for a wider sound stage.

  ▪ **Volume Stabilizer** - it maintains a constant volume for all elements of the audio experience (dialogs, soundtrack, explosions, etc.) to make them all sound softer, balanced or louder. The Quiet On / Off option allows to enter a night mode by removing some basses. This way, you won't disturb people around you if you're using speakers to play your media.

- **Voices** - it boosts (or removes) the speech in movies, video games and incoming communication from -12 to +12 dB.
- **Bass** - increases (or decreases) the energy in low frequencies from -12 to +12 dB.
- **Treble** - increases (or decreases) the energy in high frequencies from -12 to +12 dB.

• **Reset Button** - restores the current profile to its default values.

• **Try Button** - launches an audio sample that allows to test audio settings.

Microphone Tab

From this tab, you can access all of Nahimic 3's microphone effects and settings.

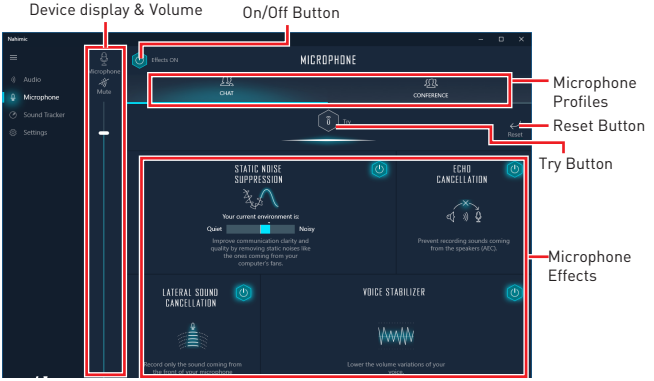

• **Device display and volume** - displays the type of recording device currently being used as input, as well as its current volume.

- **Mute** - mutes the current mic device.

• **Mic profiles** - allows you to choose between 2 factory mic profiles to fit your experience (Chat or Conference). All profiles can be modified as you wish.

• **On / Off button** - allows you to turn on and off all Nahimic 3's microphone effects in one click.

• **Microphone Effects** - allows you to separately control any of the 4 microphone effects.

- **Static Noise Suppression** - it removes the static noises like the ones coming from your computer fans.
- **Echo Cancellation** - improves the voice quality by cancelling the echo.
- **Lateral Sound Cancellation** - it only records the sound coming from the front of your microphone.
- **Voice Stabilizer** - Levels the volume of your voice in order to avoid any saturation and maintains a constant and clear communication.

• **Reset Button** - restores the current profile to its default values.

• **Try Button** - Turns the microphone loopback On/Off.

Sound Tracker Tab

The Sound Tracker is an FPS oriented feature that provides a visual indication localizing the sources of the sounds while in a game. These are represented by dynamic segments pointing the direction of the sounds: the more opaque they are, the stronger the sounds are. Thanks to this feature, players are able to pick up an approaching threat more definitively and easily, thereby being even more dynamic. The Sound Tracker captures the 5.1 and 7.1 sound streams processed by your audio system, and is displayed in the applications and games using DirectX 9, 9c, 10 and 11.

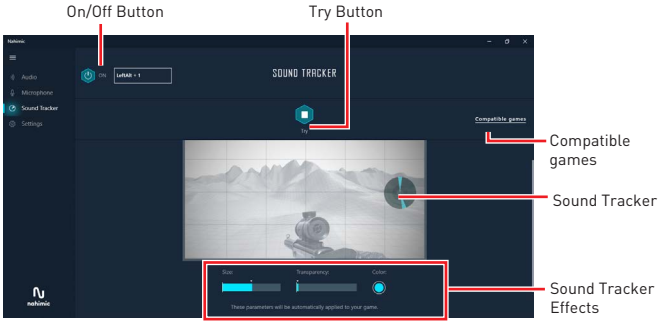

• **ON / OFF Button** - allows you to enable/ disable the Sound Tracker by switching this option ON/ OFF.

• **Try Button** - launch a 7.1 audio sample allowing you to preview how the radar will react in your game.

• **Sound Tracker Effects**

  ▪ **Size** - allows you to adjust the scale of the Sound Tracker, making it look bigger or smaller.

  ▪ **Transparency** - allows you to adjust the transparency of the Sound Tracker, making it look more or less discrete.

  ▪ **Color** - click the colored circle to open the color edition window. You can apply the color you want to the dynamic segments.

• **Compatible games** - clicking this link opens the official Nahimic website, and leads to the list of compatible games able to display the Sound Tracker.

Settings Tab

In this section, it allows you to select the language of Nahimic 3's UI.

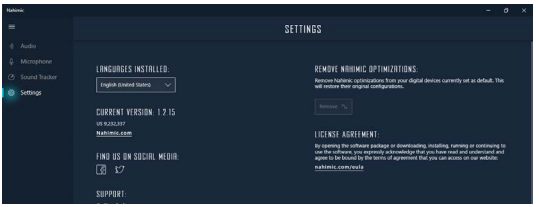

RAID Configuration

The introduction of RAID levels and types are as below:

RAID 0 breaks the data into blocks which are written to separate hard drives. Spreading the hard drive I/O load across independent channels greatly improves I/O performance.

RAID 1 provides data redundancy by mirroring data between the hard drives and provides enhanced read performance.

RAID 5 provides data striping at the byte level and also stripe error correction information. This results in excellent performance and good fault tolerance.

RAID 10 uses four hard drives to create a combination of RAID 0 and 1 by forming a RAID 0 array from two RAID 1 arrays.

RAID level comparison

	RAID 0	RAID 1	RAID 5	RAID 10
Minimum # drives	2	2	3	4
Data protection	None	Excellent	Excellent	Excellent
Read performance	Excellent	OK	Good	OK
Write performance	Excellent	Good	OK	Good
Capacity utilization	100%	50%	67%~(1-1/n)	50%

Important

All the information/ volumes/ pictures listed in your system might differ from the illustrations in this appendix.

Intel RAID User Guide

If you'd like to know more instructions on how to set up Intel RAID, please refer to

http://download.msi.com/manual/mb/IntelRAID.pdf

or scan the QR code to access.

Intel® Optane™ Memory Configuration

Intel® Optane™ memory is a technology which allows the system to access the data more quickly. It enables the computer to store commonly used data and programs, and keeps them even after powering off the computer. Before you start to install Intel® Optane™ memory, please note that it requires Windows 10 64-bit operating system.

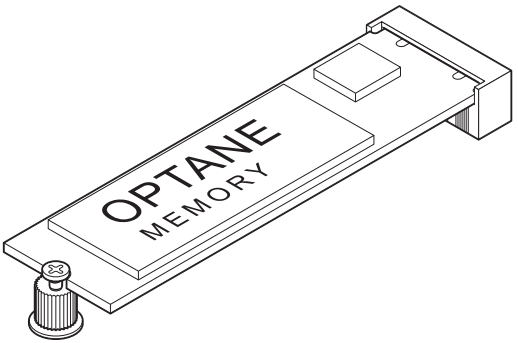

Intel® Optane™ Memory User Guide

If you'd like to know more instructions on how to enable or remove Intel® Optane™ Memory, please refer to

http://download.msi.com/manual/mb/Optane.pdf

or scan the QR code to access.

WARNING

After you enable Intel® Optane™ memory, please note the following to prevent damage to your operating system.

- ***DO NOT set the SATA mode back to AHCI in BIOS.***
- ***DO NOT revert back to older version of the BIOS.***
- ***DO NOT remove the Intel® Optane™ memory module.***
- ***DO NOT replace the CPU that is not supported by Intel® Optane™ Memory.***

Troubleshooting

Before sending the motherboard for RMA repair, try to go over troubleshooting guide first to see if your got similar symptoms as mentioned below.

The power is not on.

• Connect the AC power cord to an electrical outlet securely.

• Check if all ATX power connectors like **ATX_PWR1, CPU_PWR1** are connected from the power supply to the motherboard?

• Some power supply units have a power button on the rear side, make sure the button is turned on.

• Check if the power switch cable is connected to **JFP1** pin header properly.

• Verify the **Clear CMOS** jumper **JBAT1** is set to **Keep DATA**.

• Test with another known working power supply of equal or greater wattage.

The power is on, but no signal to monitor

• Connect the monitor power cord to a electrical outlet securely.

• Make sure the monitor is turned on.

• Select different inputs on the monitor.

• If 3 long beeps are heard, remove all memory modules and try to install only one memory module in the **DIMMB1** slot first and then restart the computer.

• If 1 long 2 short beeps are heard, remove and reinstall the graphics card and then restart the computer.

• Test with another known working graphics card.

The computer does not boot after updating the BIOS

• Clear the CMOS.

• Use the secondary BIOS to bootup the system (Only for motherboard with Dual BIOS)

Lost BIOS password

• Clear the CMOS, but that will cause you to lose all customized settings in the BIOS.

There is no audio

• Adjust the volume.

• Connect the speakers/headphones to audio ports on the motherboard rear IO panel.

• Remove secondary speakers/ headphones, HDMI cables, USB audio devices.

• Test with another known working speaker or headphone.

There is no network

• Make sure the network chipset driver has been installed.

• Verify if the network cable is properly connected and make sure the LAN port LEDs are properly illuminated.

• Verify your TCP/IP settings.

• Restart or reset your router.

• Test with another known working LAN cable.

The USB device is not working

• Make sure your USB drive driver has been installed.

• Verify if USB device is listed in Windows® Device Manager.

• Connect the USB device to other USB port on the motherboard rear IO panel.

Regulatory Notices

FCC Compliance Statement

Note: This equipment has been tested and found to comply with the limits for a Class B digital device, pursuant to part 15 of the FCC Rules. These limits are designed to provide reasonable protection against harmful interference in a residential installation. This equipment generates, uses and can radiate radio frequency energy and, if not installed and used in accordance with the instructions, may cause harmful interference to radio communications. However, there is no guarantee that interference will not occur in a particular installation. If this equipment does cause harmful interference to radio or television reception, which can be determined by turning the equipment off and on, the user is encouraged to try to correct the interference by one or more of the following measures:

- Reorient or relocate the receiving antenna.
- Increase the separation between the equipment and receiver.
- Connect the equipment into an outlet on a circuit different from that to which the receiver is connected.
- Consult the dealer or an experienced radio/TV technician for help.

Caution: Changes or modifications not expressly approved by the party responsible for compliance could void the user's authority to operate the equipment.

Tested to comply with FCC standards
FOR HOME OR OFFICE USE

This device complies with part 15 of the FCC Rules. Operation is subject to the following two conditions:

(1) This device may not cause harmful interference, and (2) this device must accept any interference received, including interference that may cause undesired operation.

CE Conformity

Products bearing the CE marking comply with one or more of the following EU Directives as may be applicable:

RED 2014/53/EU; Low Voltage Directive 2014/35/EU; EMC Directive 2014/30/EU; RoHS Directive 2011/65/EU.

Compliance with these directives is assessed using applicable European Harmonized Standards.

The point of contact for regulatory matters is MSI, MSI-NL Eindhoven 5706 5692 ER Son.

KC인증서

R-R-MSI-20-7D38

상호: (주)엠에스아이코리아
제품명: 메인보드
모델명: 20-7D38
제조년월: 2021년
제조자 및 제조국가: MSI/중국

クラスB情報技術装置

この装置は、クラスB情報技術装置です。この装置は、家庭環境で使用することを目的としていますが、この装置がラジオやテレビジョン受信機に近接して使用されると、受信障害を引き起こすことがあります。取扱説明書に従って正しい取り扱いをして下さい。

VCCI-B

C-Tick Compliance

N1996

Battery Information

European Union:

Batteries, battery packs, and accumulators should not be disposed of as unsorted household waste. Please use the public collection system to return, recycle, or treat them in compliance with the local regulations.

Taiwan:

廢電池請回收
For better environmental protection, waste batteries should be collected separately for recycling or special disposal.

California, USA:

The button cell battery may contain perchlorate material and requires special handling when recycled or disposed of in California.
For further information please visit:
http://www.dtsc.ca.gov/hazardouswaste/perchlorate/

CAUTION: There is a risk of explosion, if battery is incorrectly replaced.

Replace only with the same or equivalent type recommended by the manufacturer.

Chemical Substances Information

In compliance with chemical substances regulations, such as the EU REACH Regulation (Regulation EC No. 1907/2006 of the European Parliament and the Council), MSI provides the information of chemical substances in products at:

https://storage-asset.msi.com/html/popup/csr/evmtprtt_pcm.html

Environmental Policy

- The product has been designed to enable proper reuse of parts and recycling and should not be thrown away at its end of life.
- Users should contact the local authorized point of collection for recycling and disposing of their end-of-life products.
- Visit the MSI website and locate a nearby distributor for further recycling information.
- Users may also reach us at gpcontdev@msi.com for information regarding proper Disposal, Take-back, Recycling, and Disassembly of MSI products.

WEEE (Waste Electrical and Electronic Equipment) Statement

ENGLISH

To protect the global environment and as an environmentalist, MSI must remind you that...

Under the European Union ("EU") Directive on Waste Electrical and Electronic Equipment, Directive 2002/96/EC, which takes effect on August 13, 2005, products of "electrical and electronic equipment"

cannot be discarded as municipal wastes anymore, and manufacturers of covered electronic equipment will be obligated to take back such products at the end of their useful life. MSI will comply with the product take back requirements at the end of life of MSI-branded products that are sold into the EU. You can return these products to local collection points.

DEUTSCH

Hinweis von MSI zur Erhaltung und Schutz unserer Umwelt

Gemäß der Richtlinie 2002/96/EG über Elektro- und Elektronik-Altgeräte dürfen Elektro- und Elektronik-Altgeräte nicht mehr als kommunale Abfälle entsorgt werden. MSI hat europaweit verschiedene Sammel- und Recyclingunternehmen beauftragt, die in die Europäische Union in Verkehr gebrachten Produkte, am Ende seines Lebenszyklus zurückzunehmen. Bitte entsorgen Sie dieses Produkt zum gegebenen Zeitpunkt ausschliesslich an einer lokalen Altgerätesammelstelle in Ihrer Nähe.

FRANÇAIS

En tant qu'écologiste et afin de protéger l'environnement, MSI tient à rappeler ceci...

Au sujet de la directive européenne (EU) relative aux déchets des équipement électriques et électroniques, directive 2002/96/EC, prenant effet le 13 août 2005, que les produits électriques et électroniques ne peuvent être déposés dans les décharges ou tout simplement mis à la poubelle. Les fabricants de ces équipements seront obligés de récupérer certains produits en fin de vie. MSI prendra en compte cette exigence relative au retour des produits en fin de vie au sein de la communauté européenne. Par conséquent vous pouvez retourner localement ces matériels dans les points de collecte.

РУССКИЙ

Компания MSI предпринимает активные действия по защите окружающей среды, поэтому напоминаем вам, что....

В соответствии с директивой Европейского Союза (ЕС) по предотвращению загрязнения окружающей среды использованным электрическим и электронным оборудованием (директива WEEE 2002/96/EC), вступающей в силу 13 августа 2005 года, изделия, относящиеся к электрическому и электронному оборудованию, не могут рассматриваться как бытовой мусор, поэтому производители вышеперечисленного электронного оборудования обязаны принимать его для переработки по окончании срока службы. MSI обязуется соблюдать требования по приему продукции, проданной под маркой MSI на территории ЕС, в переработку по окончании срока службы. Вы можете вернуть эти изделия в специализированные пункты приема.

ESPAÑOL

MSI como empresa comprometida con la protección del medio ambiente, recomienda:

Bajo la directiva 2002/96/EC de la Unión Europea en materia de desechos y/o equipos electrónicos, con fecha de rigor desde el 13 de agosto de 2005, los productos clasificados como "eléctricos y equipos electrónicos" no pueden ser depositados en los contenedores habituales de su municipio, los fabricantes de equipos electrónicos, están obligados a hacerse cargo de dichos productos al termino de su período de vida. MSI estará comprometido con los términos de recogida de sus productos vendidos en la Unión Europea al final de su periodo de vida. Usted debe depositar estos productos en el punto limpio establecido por el ayuntamiento de su localidad o entregar a una empresa autorizada para la recogida de estos residuos.

NEDERLANDS

Om het milieu te beschermen, wil MSI u eraan herinneren dat....

De richtlijn van de Europese Unie (EU) met betrekking tot Vervuiling van Electrische en Electronische producten (2002/96/EC), die op 13 Augustus 2005 in zal gaan kunnen niet meer beschouwd worden als vervuiling. Fabrikanten van dit soort producten worden verplicht om producten retour te nemen aan het eind van hun levenscyclus. MSI zal overeenkomstig de richtlijn handelen voor de producten die de merknaam MSI dragen en verkocht zijn in de EU. Deze goederen kunnen geretourneerd worden op lokale inzamelingspunten.

SRPSKI

Da bi zaštitili prirodnu sredinu, i kao preduzeće koje vodi računa o okolini i prirodnoj sredini, MSI mora da vas podesti da...

Po Direktivi Evropske unije ("EU") o odbačenoj ekektronskoj i električnoj opremi, Direktiva 2002/96/EC, koja stupa na snagu od 13. Avgusta 2005, proizvodi koji spadaju pod "elektronsku i električnu opremu" ne mogu više biti odbačeni kao običan otpad i proizvođači ove opreme biće prinuđeni da uzmu natrag ove proizvode na kraju njihovog uobičajenog veka trajanja. MSI će poštovati zahtev o preuzimanju ovakvih proizvoda kojima je istekao vek trajanja, koji imaju MSI oznaku i koji su prodati u EU. Ove proizvode možete vratiti na lokalnim mestima za prikupljanje.

POLSKI

Aby chronić nasze środowisko naturalne oraz jako firma dbająca o ekologię, MSI przypomina, że...

Zgodnie z Dyrektywą Unii Europejskiej ("UE") dotyczącą odpadów produktów elektrycznych i elektronicznych (Dyrektywa 2002/96/EC), która wchodzi w życie 13 sierpnia 2005, tzw. "produkty oraz wyposażenie elektryczne i elektroniczne " nie mogą być traktowane jako śmieci komunalne, tak więc producenci tych produktów będą zobowiązani do odbierania ich w momencie gdy produkt jest wycofywany z użycia. MSI wypełni wymagania UE, przyjmując produkty (sprzedawane na terenie Unii Europejskiej) wycofywane z użycia. Produkty MSI będzie można zwracać w wyznaczonych punktach zbiorczych.

TÜRKÇE

Çevreci özelliğiyle bilinen MSI dünyada çevreyi korumak için hatırlatır:

Avrupa Birliği (AB) Kararnamesi Elektrik ve Elektronik Malzeme Atığı, 2002/96/EC Kararnamesi altında 13 Ağustos 2005 tarihinden itibaren geçerli olmak üzere, elektrikli ve elektronik malzemeler diğer atıklar gibi çöpe atılamayacak ve bu elektonik cihazların üreticileri, cihazların kullanım süreleri bittikten sonra ürünleri geri toplamakla yükümlü olacaktır. Avrupa Birliği'ne satılan MSI markalı ürünlerin kullanım süreleri bittiğinde MSI ürünlerin geri alınması isteği ile işbirliği içerisinde olacaktır. Ürünlerinizi yerel toplama noktalarına bırakabilirsiniz.

ČESKY

Záleží nám na ochraně životního prostředí - společnost MSI upozorňuje...

Podle směrnice Evropské unie ("EU") o likvidaci elektrických a elektronických výrobků 2002/96/EC platné od 13. srpna 2005 je zakázáno likvidovat "elektrické a elektronické výrobky" v běžném komunálním odpadu a výrobci elektronických výrobků, na které se tato směrnice vztahuje, budou povinni odebírat takové výrobky zpět po skončení jejich životnosti. Společnost MSI splní požadavky na odebírání výrobků značky MSI, prodávaných v zemích EU, po skončení jejich životnosti. Tyto výrobky můžete odevzdat v místních sběrnách.

MAGYAR

Annak érdekében, hogy környezetünket megvédjük, illetve környezetvédőként fellépve az MSI emlékezteti Önt, hogy ...

Az Európai Unió („EU") 2005. augusztus 13-án hatályba lépő, az elektromos és elektronikus berendezések hulladékairól szóló 2002/96/EK irányelve szerint az elektromos és elektronikus berendezések többé nem kezelhetőek lakossági hulladékként, és az ilyen elektronikus berendezések gyártói kötelessé válnak az ilyen termékek visszavételére azok hasznos élettartama végén. Az MSI betartja a termékvisszavétellel kapcsolatos követelményeket az MSI márkanév alatt az EU-n belül értékesített termékek esetében, azok élettartamának végén. Az ilyen termékeket a legközelebbi gyűjtőhelyre viheti.

ITALIANO

Per proteggere l'ambiente, MSI, da sempre amica della natura, ti ricorda che....

In base alla Direttiva dell'Unione Europea (EU) sullo Smaltimento dei Materiali Elettrici ed Elettronici, Direttiva 2002/96/EC in vigore dal 13 Agosto 2005, prodotti appartenenti alla categoria dei Materiali Elettrici ed Elettronici non possono più essere eliminati come rifiuti municipali: i produttori di detti materiali saranno obbligati a ritirare ogni prodotto alla fine del suo ciclo di vita. MSI si adeguerà a tale Direttiva ritirando tutti i prodotti marchiati MSI che sono stati venduti all'interno dell'Unione Europea alla fine del loro ciclo di vita. È possibile portare i prodotti nel più vicino punto di raccolta

日本JIS C 0950材質宣言

日本工業規格JIS C 0950により、2006年7月1日以降に販売される特定分野の電気および電子機器について、製造者による含有物質の表示が義務付けられます。

https://storage-asset.msi.com/html/popup/csr/cemm_jp.html

India RoHS

This product complies with the "India E-waste (Management and Handling) Rule 2011" and prohibits use of lead, mercury, hexavalent chromium, polybrominated biphenyls or polybrominated diphenyl ethers in concentrations exceeding 0.1 weight % and 0.01 weight % for cadmium, except for the exemptions set in Schedule 2 of the Rule.

Türkiye EEE yönetmeliği

Türkiye Cumhuriyeti: EEE Yönetmeliğine Uygundur

Україна обмеження на наявність небезпечних речовин

Обладнання відповідає вимогам Технічного регламенту щодо обмеження використання деяких небезпечних речовин в електричному та електронному обладнані, затвердженого постановою Кабінету Міністрів України від 3 грудня 2008 № 1057.

Việt Nam RoHS

Kể từ ngày 01/12/2012, tất cả các sản phẩm do công ty MSI sản xuất tuân thủ Thông tư số 30/2011/TT-BCT quy định tạm thời về giới hạn hàm lượng cho phép của một số hóa chất độc hại có trong các sản phẩm điện, điện tử"

Wireless Radio Use

This device is restricted to indoor use when operating in the 2.4GHz, 5GHz frequency band.

Cet appareil doit être utilisé à l'intérieur.

당해 무선설비는 운용중 전파혼신 가능성이 있음.

この製品は、周波数帯域 2.4GHz, 5GHz で動作しているときは、屋内においてのみ使用可能です。

NCC無線設備警告聲明

工作頻率2.4GHz, 5GHz該頻段限於室內使用。

經型式認證合格之低功率射頻電機，非經許可，公司、商號或使用者均不得擅自變更頻率、加大功率或變更原設計之特性及功能。

低功率射頻電機之使用不得影響飛航安全及干擾合法通信；經發現有干擾現象時，應立即停用，並改善至無干擾時方得繼續使用。前項合法通信，指依電信法規定作業之無線電通信。低功率射頻電機須忍受合法通信或工業、科學及醫療用電波輻射性電機設備之干擾。

Products with radio functionality (EMF)

This product incorporates a radio transmitting and receiving device. For computers in normal use, a separation distance of 20 cm ensures that radio frequency exposure levels comply with EU requirements. Products designed to be operated at closer proximities, such as tablet computers, comply with applicable EU requirements in typical operating positions. Products can be operated without maintaining a separation distance unless otherwise indicated in instructions specific to the product.

Restrictions for products with radio functionality

CAUTION: IEEE 802.11x wireless LAN with 5.15–5.35 GHz frequency band is restricted for indoor use only in all European Union member states, EFTA (Iceland, Norway, Liechtenstein), and most other European countries (e.g., Switzerland, Turkey, Republic of Serbia). Using this WLAN application outdoors might lead to interference issues with existing radio services.

Radio frequency bands and maximum power levels

Features	:802.11 a/b/g/n/ac/ax, BT
Frequency Range	:2.4GHz, 5GHz, 6GHz
Modulation	:FHSS, DSSS, OFDM
Power Output	:10, 20, 23
Channel Band Width	:1, 5, 20 ,40 , 80MHz

MS-7D38主板产品中有害物质的名称及含量

部件名称	有害物质					
	铅 (Pb)	汞 (Hg)	镉 (Cd)	六价铬 (Cr(VI))	多溴联苯 (PBB)	多溴二苯醚 (PBDE)
印刷电路板组件*	×	○	○	○	○	○
电池** 	×	○	○	○	○	○
外部信号连接头	×	○	○	○	○	○
线材	×	○	○	○	○	○

本表格依据 SJ/T 11364 的规定编制。

○: 表示该有害物质在该部件所有均质材料中的含量均在 GB/T 26572 规定的限量要求以下。

×: 表示该有害物质至少在该部件的某一均质材料中的含量超出 GB/T 26572 规定的限量要求，但所有部件都符合欧盟RoHS要求。

* 印刷电路板组件: 包括印刷电路板及其构成的零部件。

** 电池本体上如有环保使用期限标识，以本体标识为主。

■ 上述有毒有害物质或元素清单会依型号之部件差异而有所增减。

■ 产品部件本体上如有环保使用期限标识，以本体标识为主。

限用物質含有情況標示聲明書

設備名稱：電腦主機板			型號(型式)：MS-7D38			
單元	限用物質及其化學符號					
	鉛 (Pb)	汞 (Hg)	鎘 (Cd)	六價鉻 (Cr^{+6})	多溴聯苯 (PBB)	多溴二苯醚 (PBDE)
電路板	○	○	○	○	○	○
電子元件	—	○	○	○	○	○
金屬機構件	—	○	○	○	○	○
塑膠機構件	○	○	○	○	○	○

備考1. “超出0.1 wt %” 及 “超出0.01 wt %” 係指限用物質之百分比含量超出百分比含量基準值。

備考2. “○” 係指該項限用物質之百分比含量未超出百分比含量基準值。

備考3. “—” 係指該項限用物質為排除項目。

Copyright

MSI Micro-Star Int'l Co.,Ltd.

Copyright © 2021 All rights reserved.

The MSI logo used is a registered trademark of Micro-Star Int'l Co., Ltd. All other marks and names mentioned may be trademarks of their respective owners. No warranty as to accuracy or completeness is expressed or implied. MSI reserves the right to make changes to this document without prior notice.

Revision History

Version 2.0, 2021/05, First release.

Technical Support

If a problem arises with your system and no solution can be obtained from the user guide, please contact your place of purchase or local distributor. Alternatively, please try the following help resources for further guidance.

- Visit the MSI website for technical guide, BIOS updates, driver updates, and other information: http://www.msi.com
- Register your product at: http://register.msi.com