PRO Series

Motherboard

PRO H610M-S WIFI
PRO H610M-S

User Guide

Contents

Quick Start 4

Specifications 16

Special Features 19

Package Contents 20

Back Panel Connectors 21

- LAN Port LED Status Table 22
- Audio Jacks Connection 22
- Installing the Wi-Fi/ Bluetooth bracket & antenna 24

Overview of Components 25

- CPU Socket 26
- DIMM Slots 27
- PCI_E1~2: PCIe Expansion Slots 28
- SATA_5~6: SATA 6Gb/s Connectors 28
- M2_1: M.2 Slot (Key M) 29
- JAUD1: Front Audio Connector 30
- JFP1, JFP2: Front Panel Connectors 30
- JCI1: Chassis Intrusion Connector 31
- CPU_PWR1, ATX_PWR1: Power Connectors 32
- JCOM1: Serial Port Connector 33
- JUSB2: USB 3.2 5Gbps Connector 33
- JUSB1 & JUSB3: USB 2.0 Connectors 34
- JTPM1: TPM Module Connector 34
- CPU_FAN1, SYS_FAN1: Fan Connectors 35
- JBAT1: Clear CMOS (Reset BIOS) Jumper 36

Onboard LEDs 37

- EZ Debug LED 37

Installing OS, Drivers & MSI Center 38

MSI Center 41
UEFI BIOS 42
BIOS Setup 43
Resetting BIOS 44
Updating BIOS 44

Quick Start

Thank you for purchasing a new motherboard from MSI®. This Quick Start section provides demonstration diagrams about how to install your computer. Some of the installations also provide video demonstrations. Please link to the URL to watch it with the web browser on your phone or tablet. You may have even link to the URL by scanning the QR code.

Preparing Tools and Components

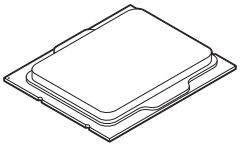

Intel® LGA1700 CPU

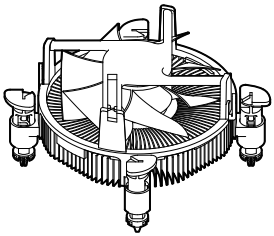

LGA1700 CPU Fan

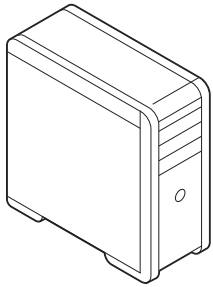

Chassis

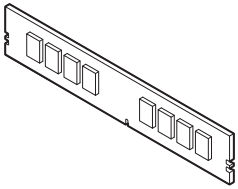

DDR5 Memory

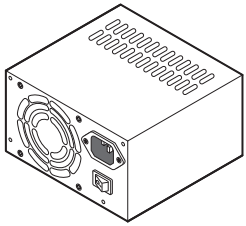

Power Supply Unit

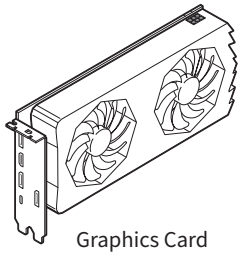

Graphics Card

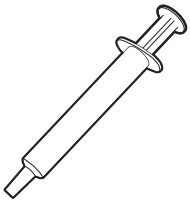

Thermal Paste

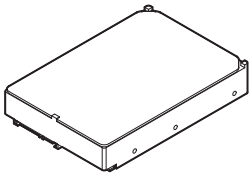

SATA Hard Disk Drive

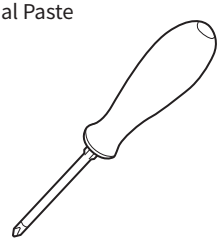

Phillips Screwdriver

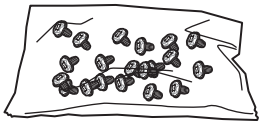

A Package of Screws

Safety Information

- The components included in this package are prone to damage from electrostatic discharge (ESD). Please adhere to the following instructions to ensure successful computer assembly.
- Ensure that all components are securely connected. Loose connections may cause the computer to not recognize a component or fail to start.
- Hold the motherboard by the edges to avoid touching sensitive components.
- It is recommended to wear an electrostatic discharge (ESD) wrist strap when handling the motherboard to prevent electrostatic damage. If an ESD wrist strap is not available, discharge yourself of static electricity by touching another metal object before handling the motherboard.
- Store the motherboard in an electrostatic shielding container or on an anti-static pad whenever the motherboard is not installed.
- Before turning on the computer, ensure that there are no loose screws or metal components on the motherboard or anywhere within the computer case.
- Do not boot the computer before installation is completed. This could cause permanent damage to the components as well as injury to the user.
- If you need help during any installation step, please consult a certified computer technician.
- Always turn off the power supply and unplug the power cord from the power outlet before installing or removing any computer component.
- Keep this user guide for future reference.
- Keep this motherboard away from humidity.
- Make sure that your electrical outlet provides the same voltage as is indicated on the PSU, before connecting the PSU to the electrical outlet.
- Place the power cord such a way that people can not step on it. Do not place anything over the power cord.
- All cautions and warnings on the motherboard should be noted.
- If any of the following situations arises, get the motherboard checked by service personnel:
  - Liquid has penetrated into the computer.
  - The motherboard has been exposed to moisture.
  - The motherboard does not work well or you can not get it work according to user guide.
  - The motherboard has been dropped and damaged.
  - The motherboard has obvious sign of breakage.
- Do not leave this motherboard in an environment above 60°C (140°F), it may damage the motherboard.

Case stand-off notification

To prevent damage to the motherboard, any unnecessary mounting stand-off between the motherboard circuits and the computer case is prohibited. The Case standoff keep out zone signs will be marked on the backside of motherboard (as shown below) to serve as a warning to user.

Avoid collision notification

Protective paint is printed around each screw hole to prevent parts from being scratched.

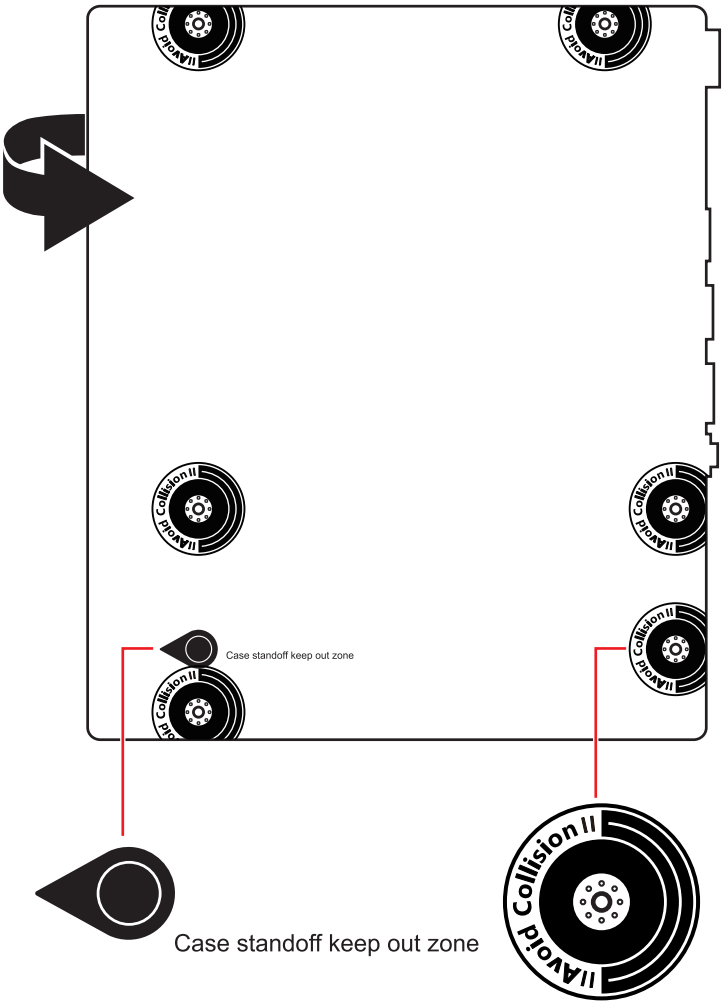

Installing a Processor

- https://youtu.be/KMf9oIDsGes

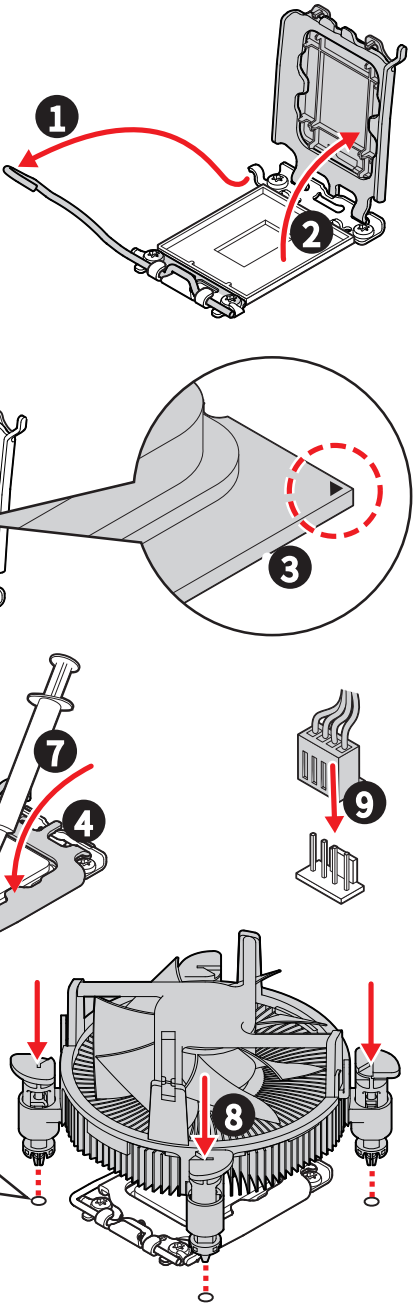

Installing DDR5 memory

- https://youtu.be/XiNmkDNZcZk

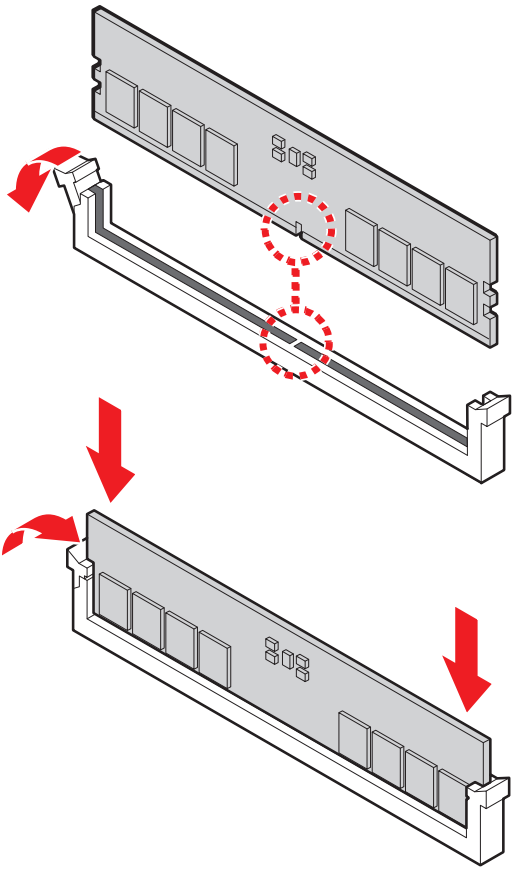

Connecting the Front Panel Header

- http://youtu.be/DPELIdVNZUI

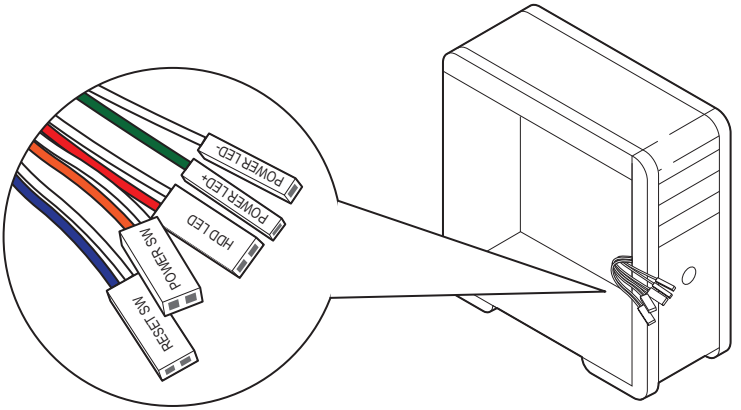

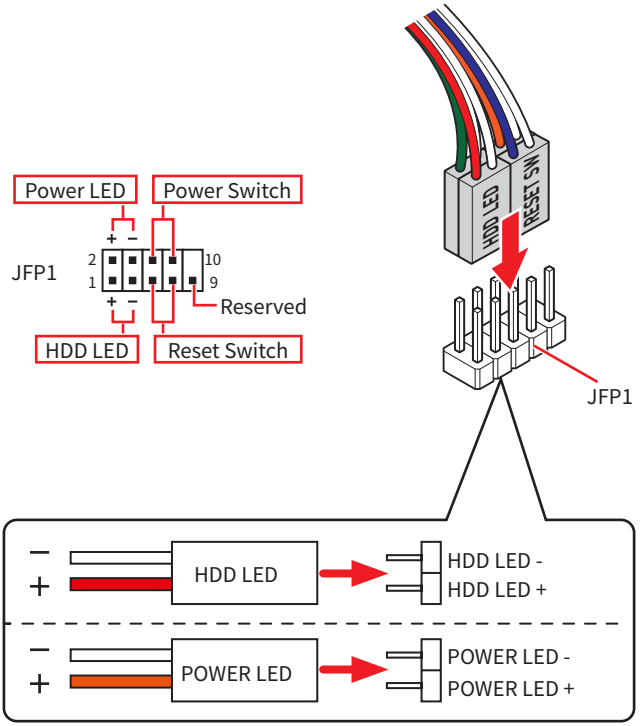

Installing the Motherboard

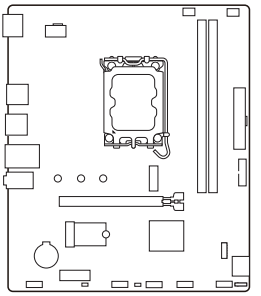

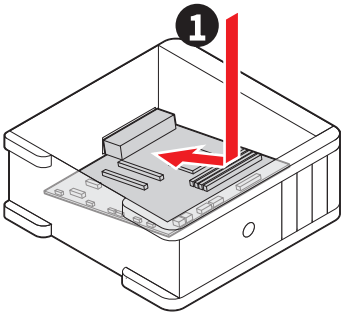

- https://youtu.be/wWI6Qt51Wnc

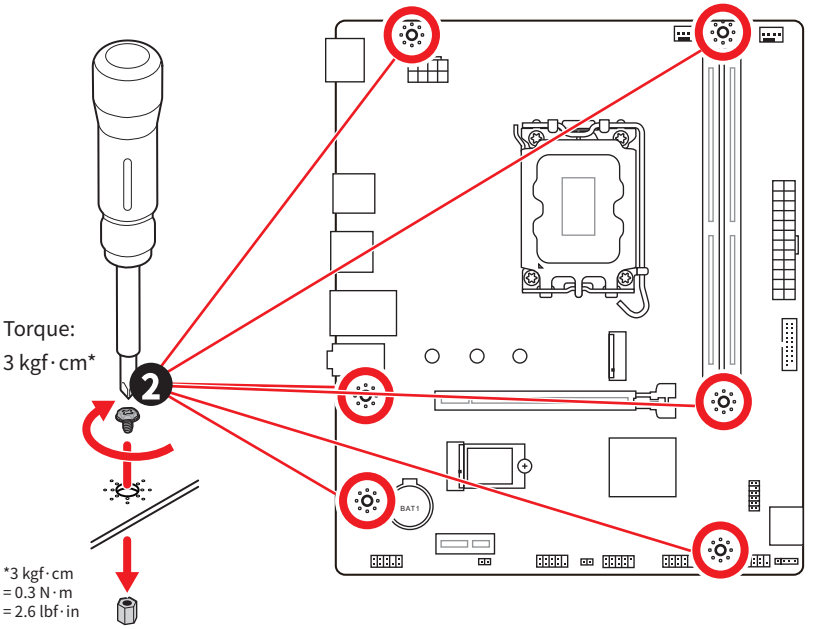

Connecting the Power Connectors

- http://youtu.be/gkDYyR_83I4

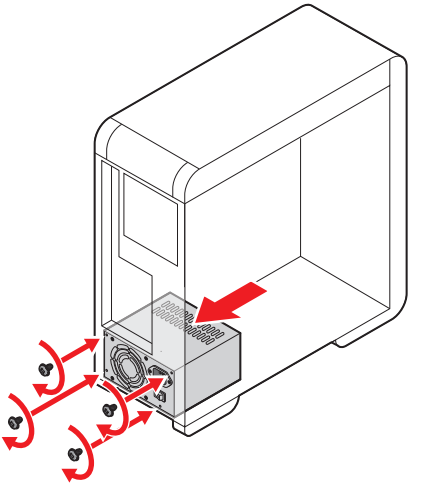

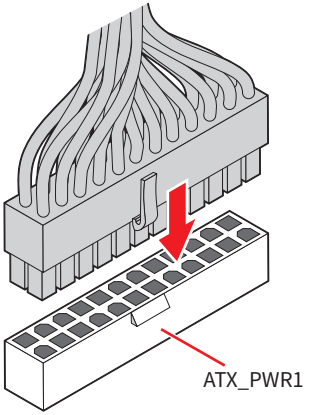

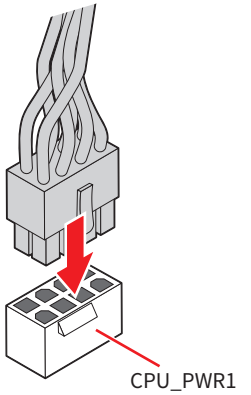

Installing SATA Drives

- http://youtu.be/RZsMpqxythc

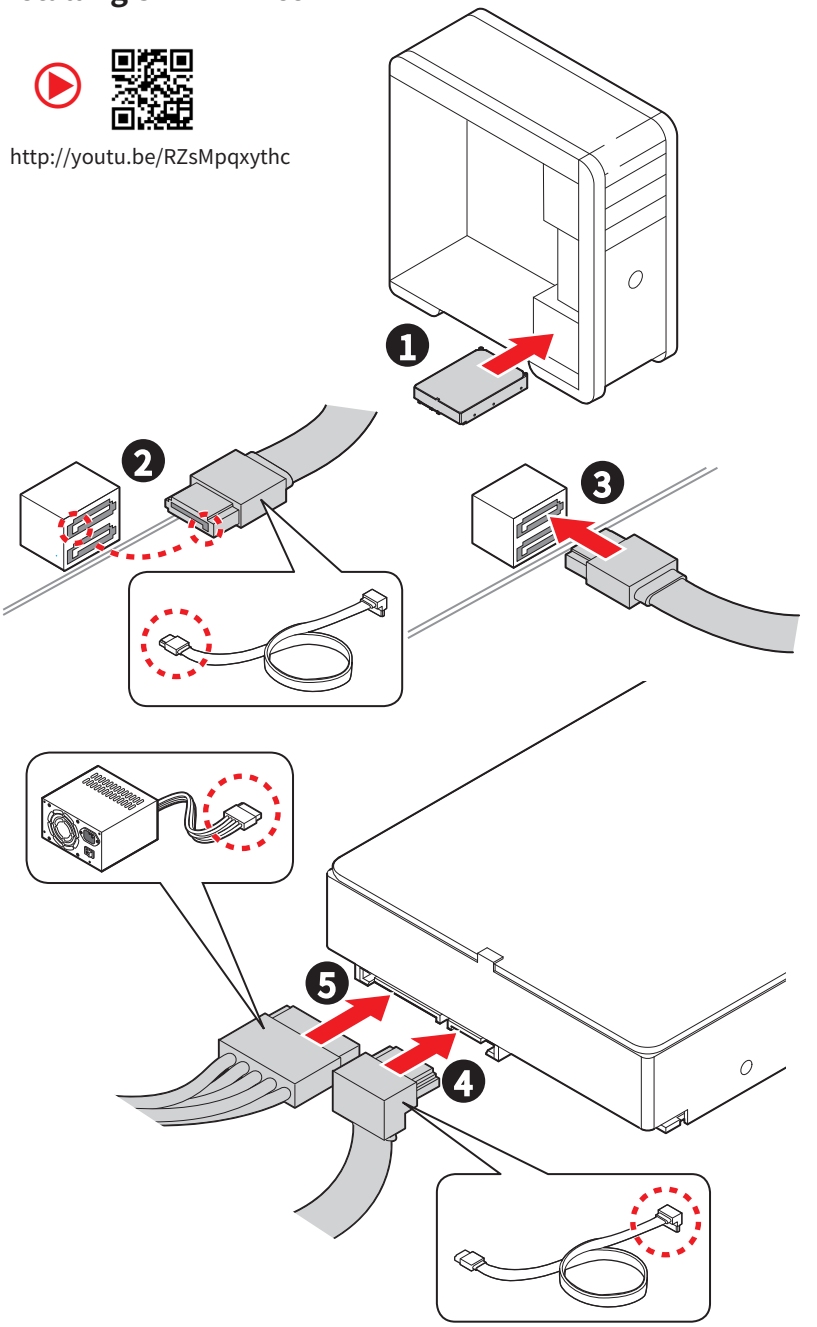

Installing a Graphics Card

- http://youtu.be/mG0GZpr9w_A

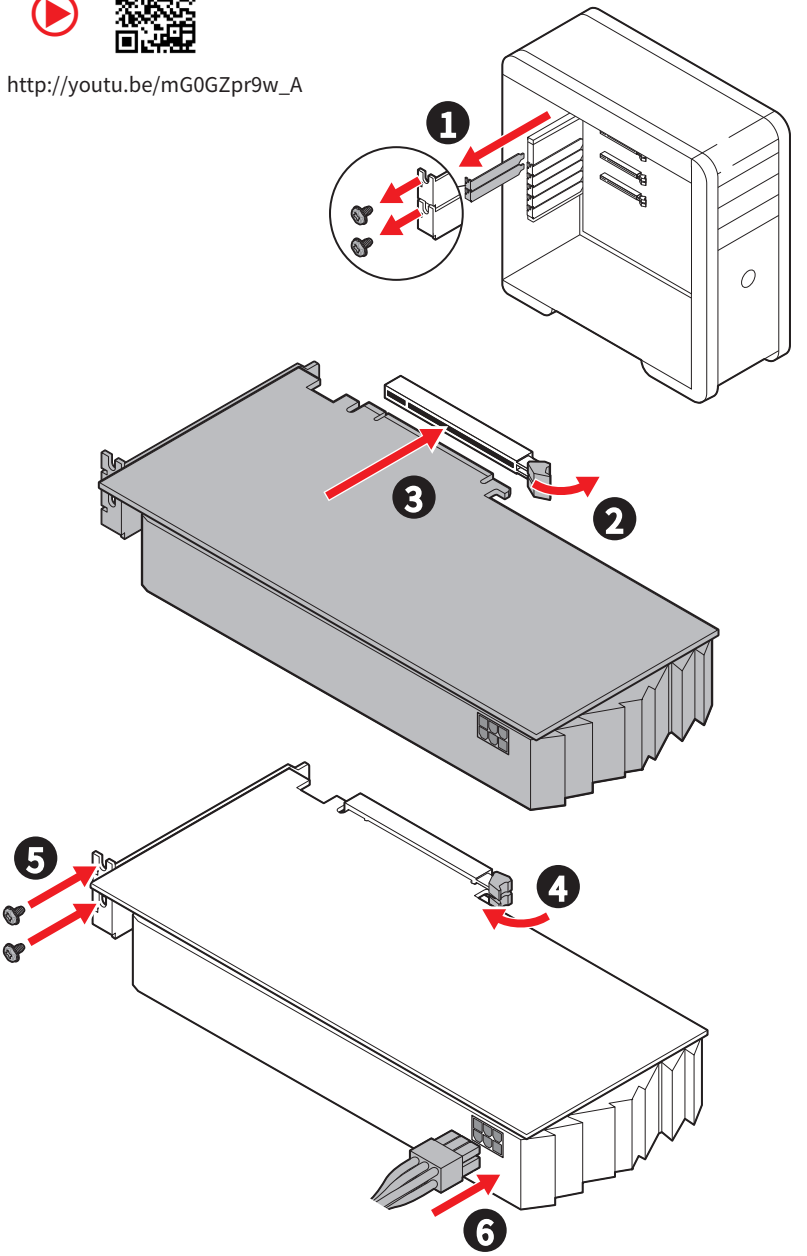

Connecting Peripheral Devices

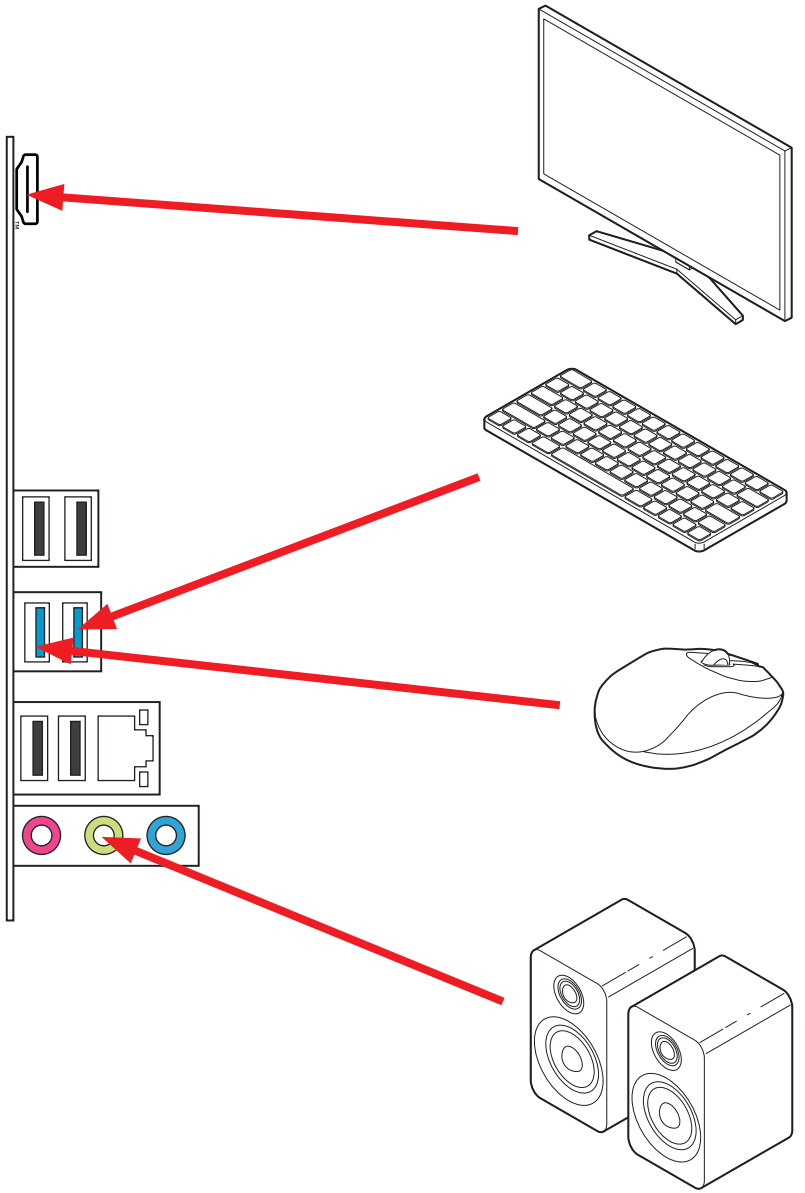

Power On

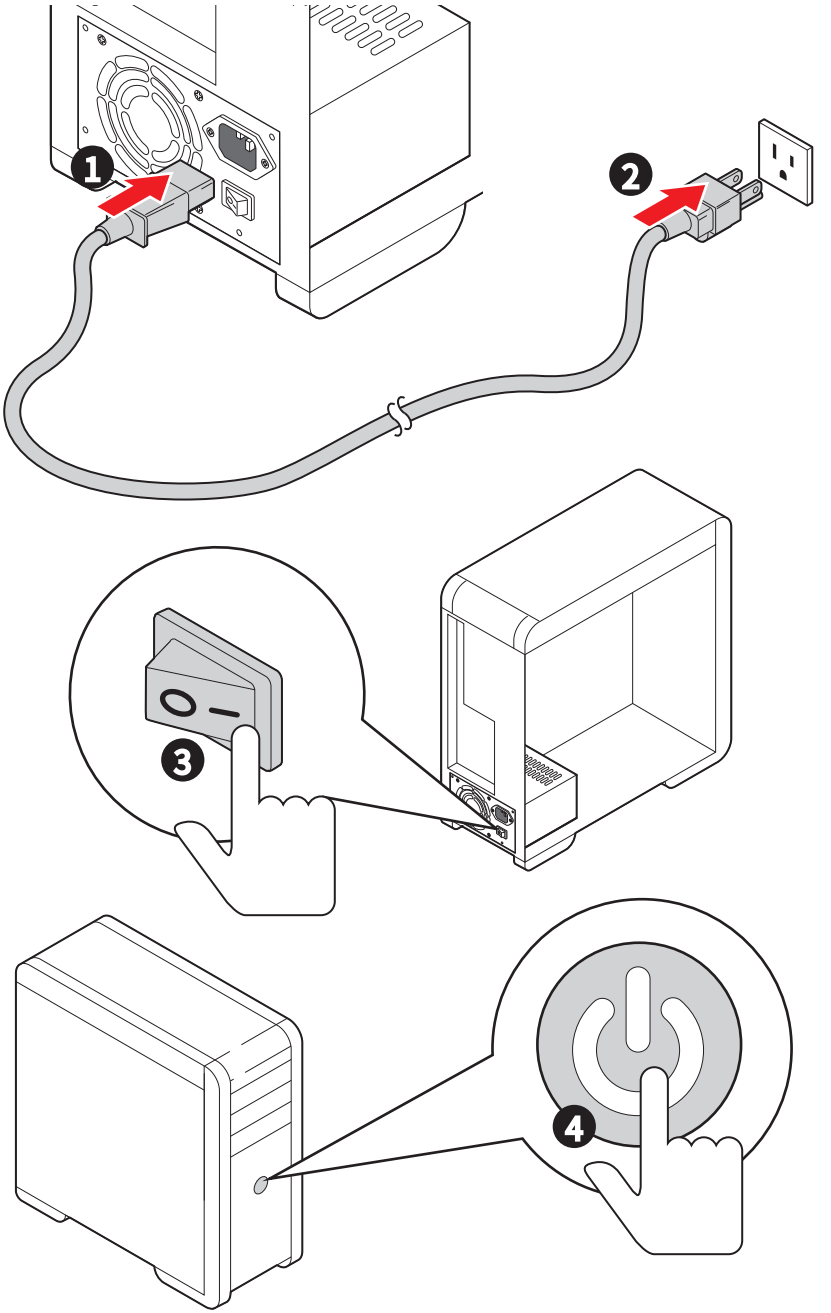

Specifications

CPU	• Supports Intel® Core™ 14th/ 13th/ 12th Gen Processors, Intel® Pentium® Gold and Celeron® Processors* • Processor socket LGA1700 * Please go to www.msi.com to get the newest support status as new processors are released.
Chipset	Intel® H610 Chipset
Memory	• 2x DDR5 memory slots*, supporting up to 128GB** • Supports Intel® POR Speed and JEDEC Speed • Supports Memory Overclocking and Intel® XMP 3.0 • Supports Dual-Controller Dual-Channel mode • Supports Non-ECC, Un-buffered memory * The DIMM slots on this motherboard only have single-sided latches. ** Memory compatibility and supported speeds can vary depending on the CPU and memory configuration. For detailed information, please refer to the Memory Compatibility List available on the product' s Support page or visit https://www.msi.com/support/ .

Expansion Slots	• 1x PCIe x16 slot (From CPU)
	  • Supports up to PCIe 4.0 x16
	• 1x PCIe x1 slot (From H610 chipset)
	  • Supports up to PCIe 3.0 x1

Onboard Graphics	• 1x HDMI™ 1.4 port with HDR, supporting a maximum resolution of 4K 30Hz*/** * Available for the processor with integrated graphics. ** Graphics specifications may vary depending on the CPU installed.
SATA Ports	2x SATA 6Gb/s ports (From H610 chipset)

M.2 SSD Slot	• 1x M.2 slot (Key M) (From H610 chipset)
	  • Supports up to PCIe 3.0 x4
	  • Supports 2242/2260/2280 storage devices

Audio	Realtek® ALC897Codec • 7.1-Channel High Definition Audio
LAN	1x Realtek® RTL8111H 1Gbps LAN controller

Continued on next column

Continued from previous column

Wi-Fi & Bluetooth® (PRO H610M-S WIFI)	Wi-Fi 6E • The Wireless module is pre-installed in the M2_WIFI1 (Key-E)slot • Supports MU-MIMO TX/RX, 2.4GHz/ 5GHz/ 6GHz*(160MHz) up to 2.4Gbps • Supports 802.11 a/ b/ g/ n/ ac/ ax • Supports Bluetooth® 5.3**, FIPS, FISMA * The usage of Wi-Fi 6GHz band relies on Windows 11 support and depends on every country' s regulations. ** The Bluetooth version may be updated, please refer to the Wi-Fi chipset vendor' s website for details.
Power Connectors	• 1x 24-pin ATX main power connector • 1x 8-pin +12V power connector

Internal USB Connectors	• 1x USB 5Gbps connector (From H610 chipset)
	  • Supports additional 2 USB 5Gbps ports
	• 2x USB 2.0 Type-A connectors (From Hub-GL850G)
	  • Support additional 4 USB 2.0 ports

Fan Connectors	• 1x 4-pin CPU fan connector • 1x 4-pin system fan connector
System Connectors	• 1x Front panel audio connector • 2x System panel connectors • 1x Chassis intrusion connector • 1x TPM module connector • 1x Serial port connector
Jumpers	• 1x Clear CMOS jumper
LED Features	• 4x EZ Debug LED
Back Panel Connectors	• 1x HDMI™ port • 4x USB 2.0 Type-A ports (From H610 chipset) • 2x USB 5Gbps Type-A ports (From H610 chipset) • 1x 1Gbps LAN (RJ45) port • 3x Audio jacks
I/O Controller	NUVOTON NCT6687D-M Controller Chip

Continued on next column

Continued from previous column

Hardware Monitor	• CPU/ System/ Chipset temperature detection • CPU/ System fan speed detection • CPU/ System fan speed control
Form Factor	• m-ATX Form Factor • 7.9 in. x 9.3 in. (200 mm x 236 mm)
BIOS Features	• 1x 256 Mb flash • UEFI AMI BIOS • ACPI 6.4, SMBIOS 3.5 • Multi-language
Software	• Drivers • MSI Center • Intel Extreme Tuning Utility • CPU-Z MSI GAMING • Norton 360 • AIDA64 Extreme - MSI Edition • Acrobat • Adobe Creative Cloud

Special Features

MSI Center Features

- Frozr AI Cooling
- LAN Manager
- User Scenario
- True Color
- Live Update
- Hardware Monitoring
- Super Charger
- Devices Speed Up
- Smart Image Finder
- MSI Companion
- System Diagnosis

Audio

- Audio Boost

Cooling

- Smart Fan Control

LED

- EZ DEBUG LED

Performance

- Memory Boost
- Front USB Type-A

Experience

- Click BIOS 5

Package Contents

Please check the contents of your motherboard package. It should contain:

Board

- 1x Motherboard

Documentation

- 1x Quick installation guide
- 1x European Union regulatory notice

Cables

- 1x SATA 6Gb/s cable

Accessories

- 1x Wi-Fi antenna bracket (PRO H610M-S WIFI)
- 1x Wi-Fi antenna set (PRO H610M-S WIFI)
- 1x M.2 screw and standoff package (1 set/pack)

Important

If any of the above items are damaged or missing, please contact your retailer.

Back Panel Connectors

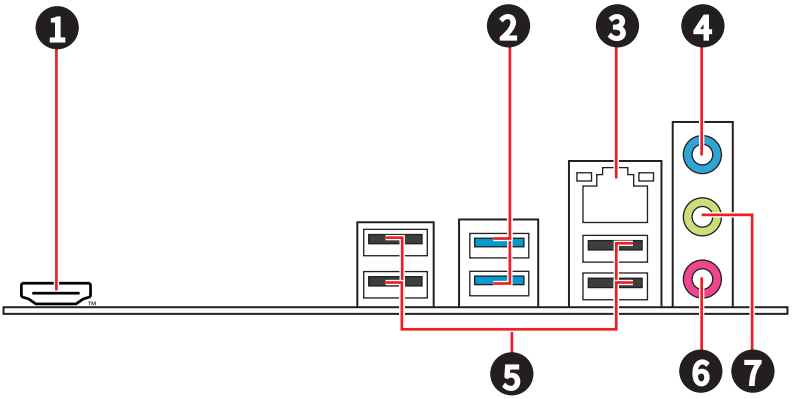

Item	Description
1	HDMI™ port
2	USB 5Gbps Type-A ports (From H610 chipset)
3	1Gbps LAN port
4	Line-in port
5	USB 2.0 Type-A ports (From H610 chipset)
6	Mic-in port
7	Line-out port

LAN Port LED Status Table

Link/ Activity LED	
Status	**Description**
Off	No link
Yellow	Linked
Blinking	Data activity

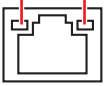

Speed LED	
Status	**Speed**
Off	10 Mbps
Green	100 Mbps
Orange	1 Gbps

Audio Jacks Connection

Audio jacks to headphone and microphone diagram

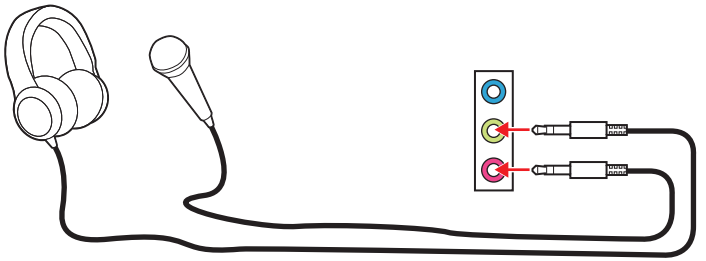

Audio jacks to stereo speakers diagram

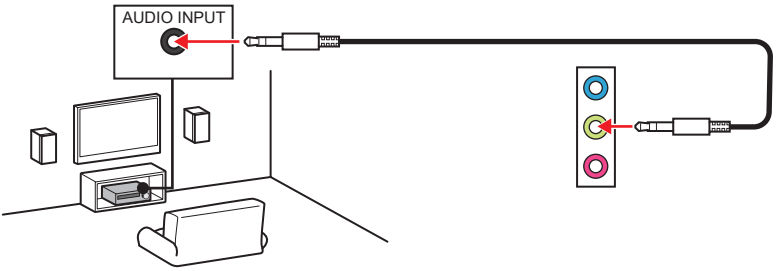

Audio jacks to 4-channel speakers diagram

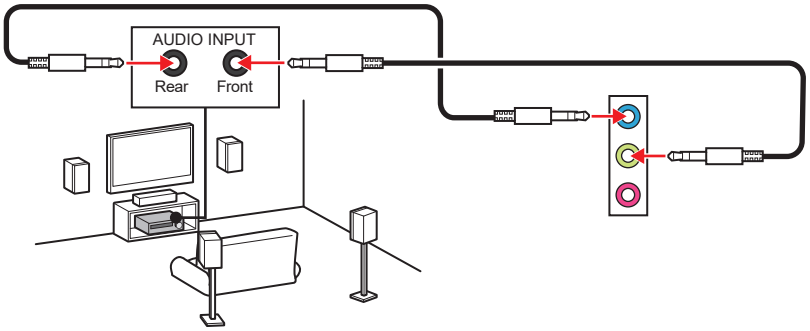

Audio jacks to 5.1-channel speakers diagram

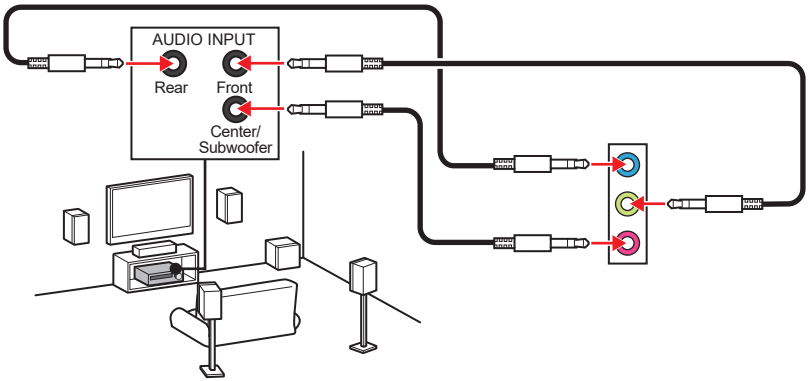

Audio jacks to 7.1-channel speakers diagram

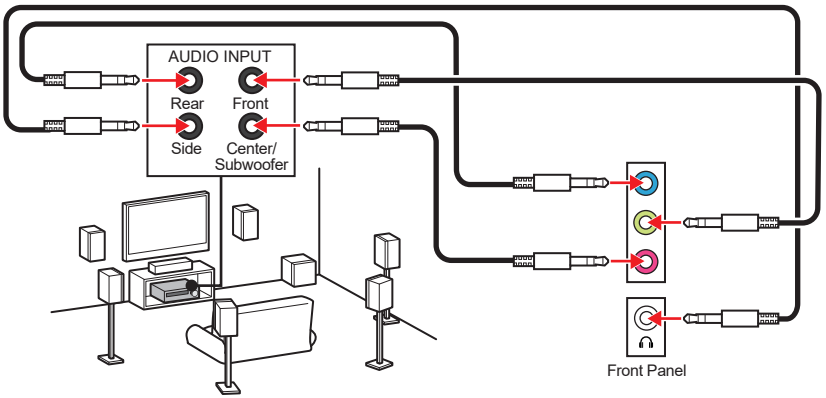

Installing the Wi-Fi/ Bluetooth bracket & antenna(PRO H610M-S WIFI)

1. Use the screw to secure the Wi-Fi/ Bluetooth bracket in the case bay.
2. Connect the antenna connectors of the bracket to the wireless module on the motherboard.
3. Screw the antennas tight to the antenna connectors of the bracket. And then orient the antennas for better signal.

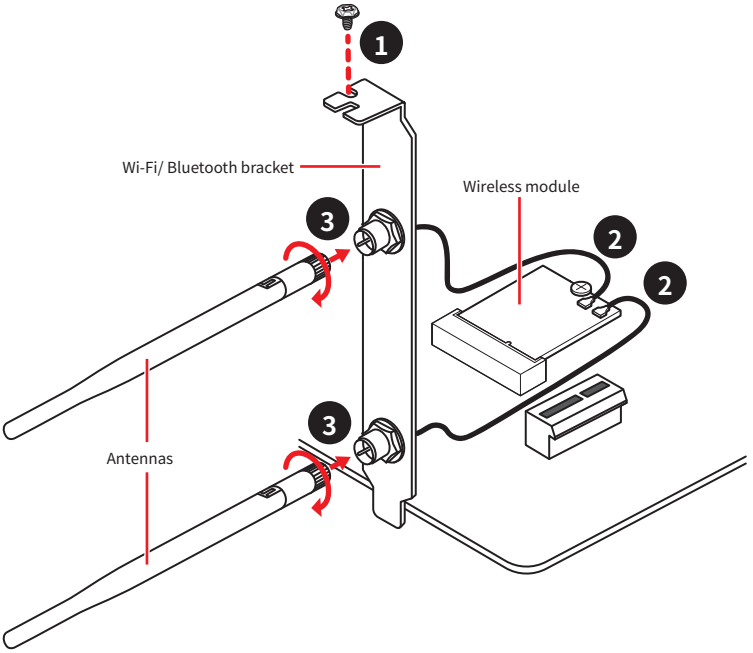

Overview of Components

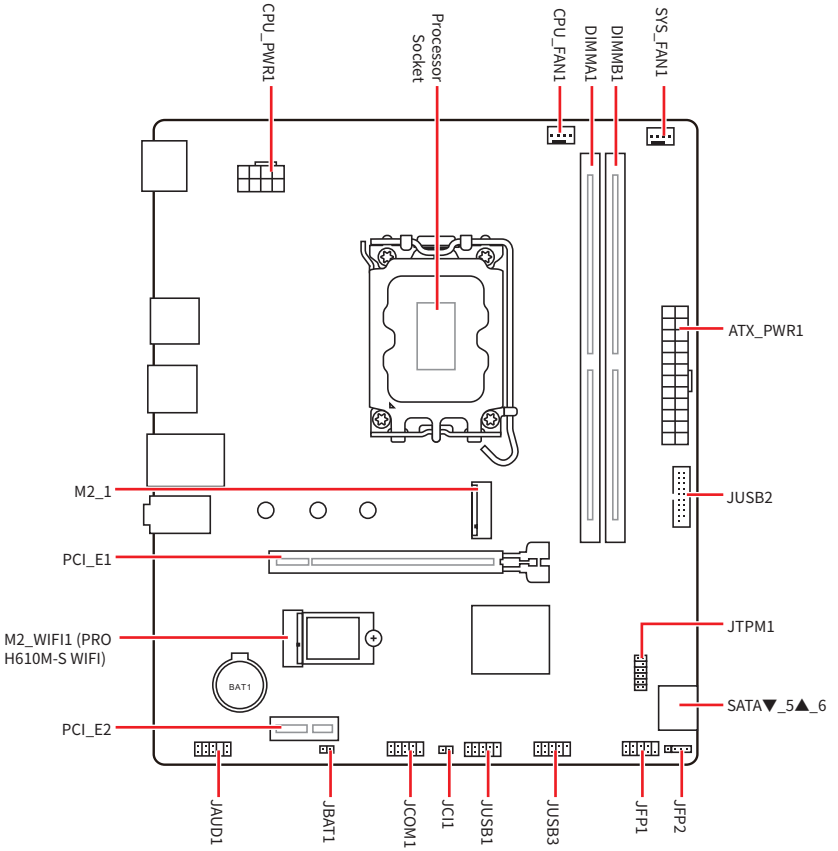

CPU Socket

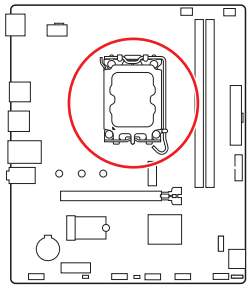

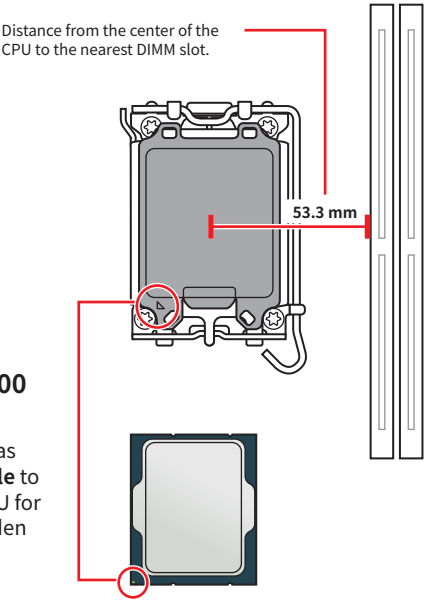

Introduction to the LGA1700 CPU

The surface of the LGA1700 CPU has four **notches** and a **golden triangle** to assist in correctly lining up the CPU for motherboard placement. The golden triangle is the Pin 1 indicator.

Important

- *Always unplug the power cord from the power outlet before installing or removing the CPU.*
- *Please retain the CPU protective cap after installing the processor. MSI will deal with Return Merchandise Authorization (RMA) requests if only the motherboard comes with the protective cap on the CPU socket.*
- *When installing a CPU, always remember to install a CPU heatsink. A CPU heatsink is necessary to prevent overheating and maintain system stability.*
- *Confirm that the CPU heatsink has formed a tight seal with the CPU before booting your system.*
- *Overheating can seriously damage the CPU and motherboard. Always make sure the cooling fans work properly to protect the CPU from overheating. Be sure to apply an even layer of thermal paste (or thermal tape) between the CPU and the heatsink to enhance heat dissipation.*
- *Whenever the CPU is not installed, always protect the CPU socket pins by covering the socket with the plastic cap.*
- *If you purchased a separate CPU and heatsink/ cooler, Please refer to the documentation in the heatsink/ cooler package for more details about installation.*
- *This motherboard is designed to support overclocking. Before attempting to overclock, please make sure that all other system components can tolerate overclocking. Any attempt to operate beyond product specifications is not recommended. MSI® does not guarantee the damages or risks caused by inadequate operation beyond product specifications.*

DIMM Slots

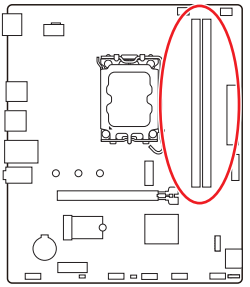

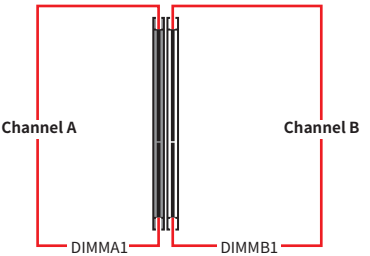

Memory module installation

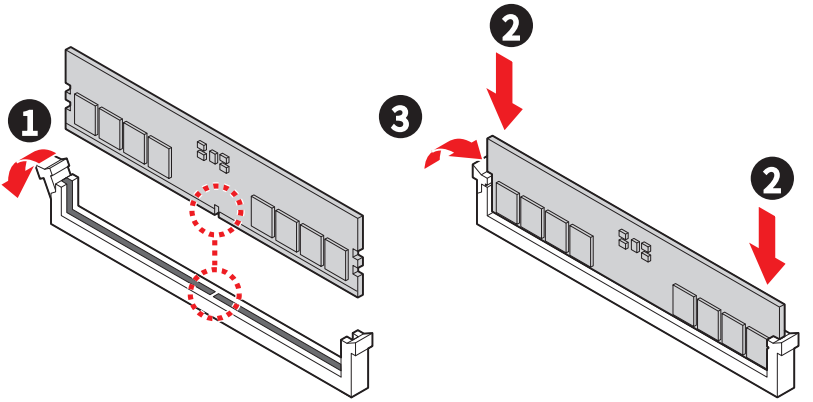

Important

- *The DIMM slots on this motherboard only have a single latch. Please be careful when installing or removing memory modules to avoid damaging the slots.*
- *To ensure system stability for Dual channel mode, memory modules must be of the same type, number and density.*
- *Some memory modules may operate at a lower frequency than the marked value when overclocking due to the memory frequency operates dependent on its Serial Presence Detect (SPD). Go to BIOS and find the **DRAM Frequency** to set the memory frequency if you want to operate the memory at the marked or at a higher frequency.*
- *It is recommended to use a more efficient memory cooling system for full DIMMs installation or overclocking.*
- *The stability and compatibility of installed memory module depend on installed CPU and devices when overclocking.*
- *Please refer to www.msi.com for more information on compatible memory.*

PCI_E1~2: PCIe Expansion Slots

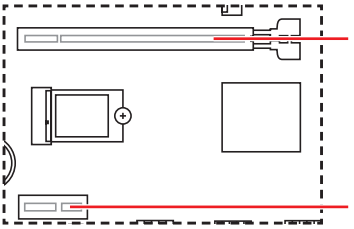

Important

- *If you install a large and heavy graphics card, you need to use a tool such as MSI Graphics Card Bolster to support its weight to prevent deformation of the slot.*
- *When adding or removing expansion cards, always turn off the power supply and unplug the power supply power cable from the power outlet. Read the expansion card' s documentation to check for any necessary additional hardware or software changes.*

SATA_5~6: SATA 6Gb/s Connectors

These connectors are SATA 6Gb/s interface ports. Each connector can connect to one SATA device.

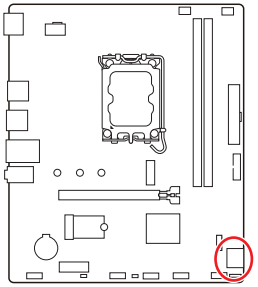

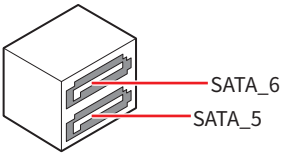

Important

- *Please do not fold the SATA cable at a 90-degree angle. Data loss may result during transmission otherwise.*
- *SATA cables have identical plugs on either sides of the cable. However, it is recommended that the flat connector be connected to the motherboard for space saving purposes.*

M2_1: M.2 Slot (Key M)

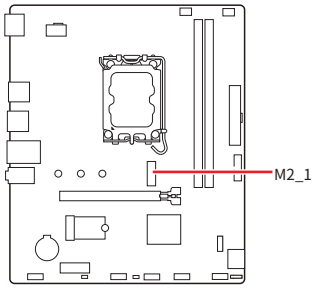

Important

Intel® RST only supports PCIe M.2 SSD with UEFI ROM.

Installing M.2 module

1. Secure the supplied M.2 standoff according to your M.2 SSD length if need.
2. Insert your M.2 SSD into the M.2 slot at a 30-degree angle.
3. Secure the M.2 SSD in place with the supplied M.2 screw.

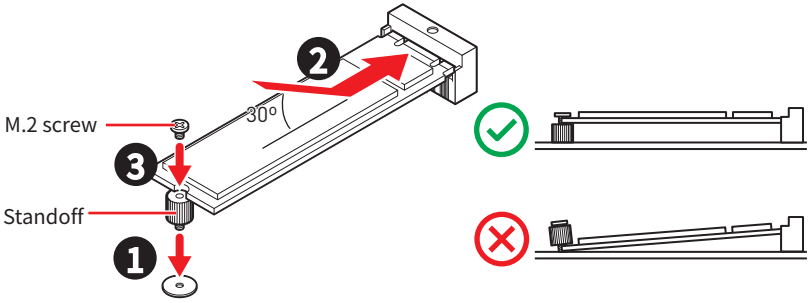

JAUD1: Front Audio Connector

This connector allows you to connect audio jacks on the front panel.

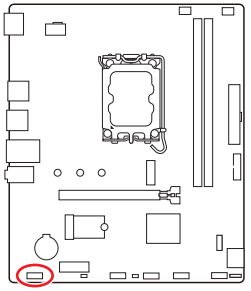

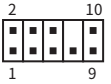

Pin	Signal Name	Pin	Signal Name
1	MIC L	2	Ground
3	MIC R	4	NC
5	Head Phone R	6	MIC Detection
7	SENSE_SEND	8	No Pin
9	Head Phone L	10	Head Phone Detection

JFP1, JFP2: Front Panel Connectors

The JFP1 connector controls the power on, power reset, and the LEDs on your PC case/ chassis. Power Switch/ Reset Switch headers allow you to connect power button/ reset button. Power LED header connects to LED light on the PC case, and HDD LED header indicates the activity of the hard disk. The JFP2 connector is for Buzzer and Speaker. To connect the cables from PC case to the right pins, please refer to the following images below.

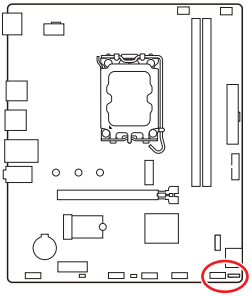

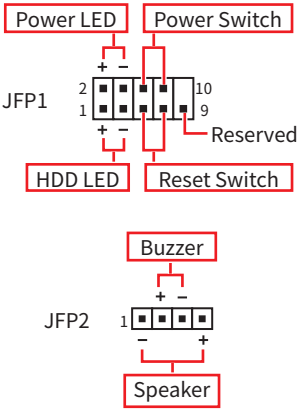

Important

Please note that Power LED and HDD LED have positive and negative connection, you need to link up the cable to the corresponding positive and negative port on the motherboard. Otherwise, LEDs won' t work properly.

JCI1: Chassis Intrusion Connector

This connector allows you to connect the chassis intrusion switch cable.

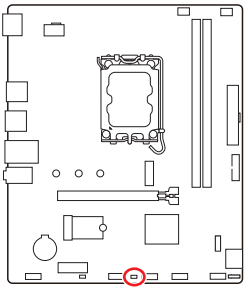



Normal
(default)



Trigger the chassis
intrusion event

Using chassis intrusion detector

1. Connect the **JCI1** connector to the chassis intrusion switch/ sensor on the chassis.
2. Close the chassis cover.
3. Go to **BIOS > Security > Chassis Intrusion Configuration**.
4. Set **Chassis Intrusion** to **Enabled**.
5. Press **F10** to save and exit and then press the **Enter** key to select **Yes**.
6. Once the chassis cover is opened again, a warning message will be displayed on screen when the computer is turned on.

Resetting the chassis intrusion warning

1. Go to **BIOS > Security > Chassis Intrusion Configuration**.
2. Set **Chassis Intrusion** to **Reset**.
3. Press **F10** to save and exit and then press the Enter key to select **Yes**.

CPU_PWR1, ATX_PWR1: Power Connectors

These connectors allow you to connect an ATX power supply.

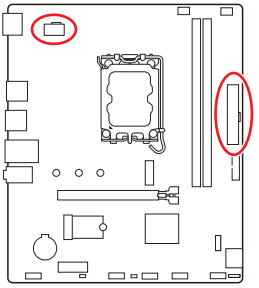

CPU_PWR1



ATX_PWR1

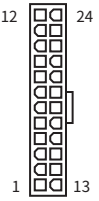

CPU_PWR1

Pin	Signal Name	Pin	Signal Name
1	Ground	2	Ground
3	Ground	4	Ground
5	+12V	6	+12V
7	+12V	8	+12V

ATX_PWR1

Pin	Signal Name	Pin	Signal Name
1	+3.3V	2	+3.3V
3	Ground	4	+5V
5	Ground	6	+5V
7	Ground	8	PWR OK
9	5VSB	10	+12V
11	+12V	12	+3.3V
13	+3.3V	14	-12V
15	Ground	16	PS-ON#
17	Ground	18	Ground
19	Ground	20	Res
21	+5V	22	+5V
23	+5V	24	Ground

Important

Make sure that all the power cables are securely connected to a proper ATX power supply to ensure stable operation of the motherboard.

JCOM1: Serial Port Connector

This connector allows you to connect the optional serial port with bracket.

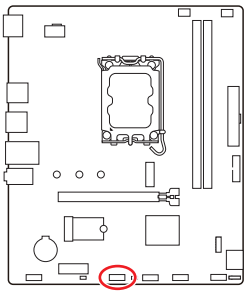

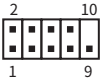

Pin	Signal Name	Pin	Signal Name
1	DCD	2	SIN
3	SOUT	4	DTR
5	Ground	6	DSR
7	RTS	8	CTS
9	RI	10	No Pin

JUSB2: USB 5Gbps Connector

This connector allows you to connect USB 5Gbps ports on the front panel.

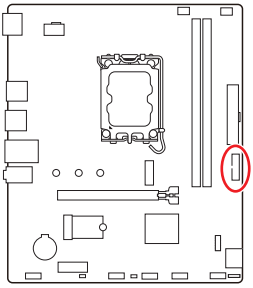

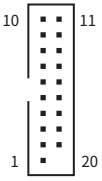

Pin	Signal Name	Pin	Signal Name
1	Power	2	USB3_RX_DN
3	USB3_RX_DP	4	Ground
5	USB3_TX_C_DN	6	USB3_TX_C_DP
7	Ground	8	USB2.0-
9	USB2.0+	10	Ground
11	USB2.0+	12	USB2.0-
13	Ground	14	USB3_TX_C_DP
15	USB3_TX_C_DN	16	Ground
17	USB3_RX_DP	18	USB3_RX_DN
19	Power	20	No Pin

Important

Note that the Power and Ground pins must be connected correctly to avoid possible damage.

JUSB1 & JUSB3: USB 2.0 Connectors

These connectors allow you to connect USB 2.0 ports on the front panel.

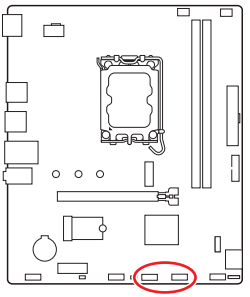

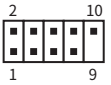

Pin	Signal Name	Pin	Signal Name
1	VCC	2	VCC
3	USB0-	4	USB1-
5	USB0+	6	USB1+
7	Ground	8	Ground
9	No Pin	10	NC

Important

- *Note that the VCC and Ground pins must be connected correctly to avoid possible damage.*
- *In order to recharge your iPad, iPhone and iPod through USB ports, please install MSI Center utility.*

JTPM1: TPM Module Connector

This connector is for TPM (Trusted Platform Module). Please refer to the TPM security platform manual for more details and usages.

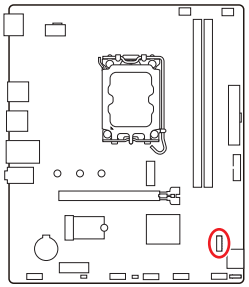

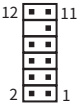

Pin	Signal Name	Pin	Signal Name
1	SPI Power	2	SPI Chip Select
3	Master In Slave Out (SPI Data)	4	Master Out Slave In (SPI Data)
5	Reserved	6	SPI Clock
7	Ground	8	SPI Reset
9	Reserved	10	No Pin
11	Reserved	12	Interrupt Request

CPU_FAN1, SYS_FAN1: Fan Connectors

Fan connectors can be classified as PWM (Pulse Width Modulation) Mode or DC Mode. PWM Mode fan connectors provide constant 12V output and adjust fan speed with speed control signal. DC Mode fan connectors control fan speed by changing voltage.

You can control fans in **BIOS> HARDWARE MONITOR** panel. It allows you to set DC or PWM to your fan type. Check the **Smart Fan Mode**, the fan speed will change according to the CPU or system temperature. Uncheck the **Smart Fan Mode**, the fan will spin at maximum speed.

Important

Make sure fans are working properly after switching the PWM/ DC mode.

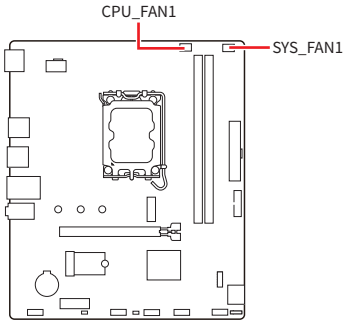



PWM Mode pin definition

Pin	Signal Name	Pin	Signal Name
1	Ground	2	+12V
3	Sense	4	Speed Control Signal

DC Mode pin definition

Pin	Signal Name	Pin	Signal Name
1	Ground	2	Voltage Control
3	Sense	4	NC

Fan connector specifications

Connector	Default fan mode	Max. current	Max. power
CPU_FAN1	PWM mode	2A	24W
SYS_FAN1	DC mode	1A	12W

JBAT1: Clear CMOS (Reset BIOS) Jumper

There is CMOS memory onboard that is external powered from a battery located on the motherboard to save system configuration data. If you want to clear the system configuration, set the jumpers to clear the CMOS memory.

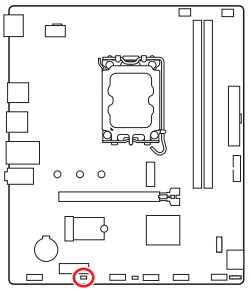



Keep Data
(default)



Clear CMOS/
Reset BIOS

Resetting BIOS to default values

1. Power off the computer and unplug the power cord.
2. Use a jumper cap to short **JBAT1** for about 5-10 seconds.
3. Remove the jumper cap from **JBAT1**.
4. Plug the power cord and Power on the computer.

Onboard LEDs

EZ Debug LED

These LEDs indicate the debug status of the motherboard.

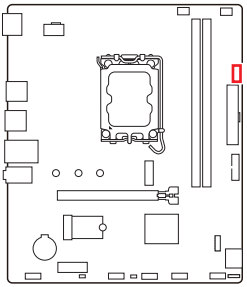

CPU - indicates CPU is not detected or fail.

DRAM - indicates DRAM is not detected or fail.

VGA - indicates GPU is not detected or fail.

BOOT - indicates the booting device is not detected or fail.

Installing OS, Drivers & MSI Center

Please download and update the latest utilities and drivers at www.msi.com

Installing Windows 11

1. Power on the computer.
2. Insert the Windows 11 installation disc/USB into your computer.
3. Press the **Restart** button on the computer case.
4. Press **F11** key during the computer POST (Power-On Self Test) to get into Boot Menu.
5. Select the Windows 11 installation disc/USB from the Boot Menu.
6. Press any key if screen shows **Press any key to boot from CD or DVD...** message. If not, please skip this step.
7. Follow the instructions on the screen to install Windows 11.

Installing Drivers with MSI Driver Utility Installer

Important

- *Some new network chips have not been natively supported by Windows 11. It is recommended that the LAN driver be installed before installing drivers with MSI Driver Utility Installer. Please refer to www.msi.com to install the LAN driver for your motherboard.*
- *The MSI Driver Utility Installer will only pop up once. If you cancel or close it during the process, please refer to the Live Update chapter of the MSI Center manual to install the drivers. You can also go to www.msi.com to search your motherboard and download the drivers.*
- *MSI Driver Utility Installer needs to be installed over the internet.*

1. Start up your computer in Windows 11.
2. Select Start > Settings > Windows Update, and then select Check for updates.
3. MSI Driver Utility Installer will pop up automatically.

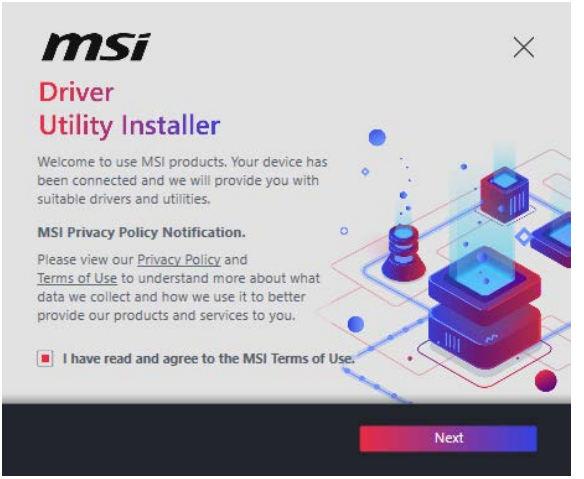

4. Select the **I have read and agree to the MSI Terms of Use** check box, and then click **Next**.

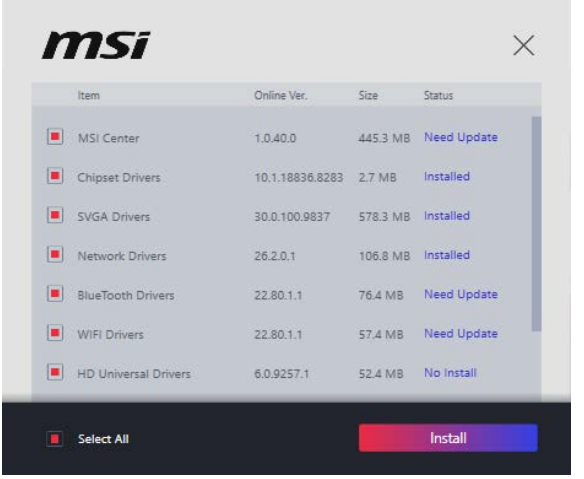

5. Check the **Select All** checkbox in the lower-left corner and click **Install** to install MSI Center and drivers. The installation progress will be shown at the bottom.

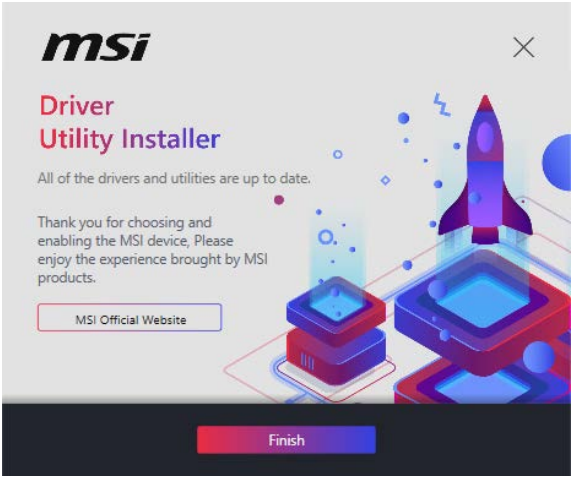

6. Once the progress has completed, click **Finish**.

MSI Center

MSI Center is an application that helps you easily optimize game settings and smoothly use content creation softwares. It also allows you to control and synchronize LED light effects on PCs and other MSI products. With MSI Center, you can customize ideal modes, monitor system performance, and adjust fan speed.

MSI Center User Guide

If you would like to know more information about MSI Center, please refer to http://download.msi.com/manual/mb/MSICENTER.pdf or scan the QR code to access.

Important

Functions may vary depending on the product you have.

UEFI BIOS

MSI UEFI BIOS is compatible with UEFI (Unified Extensible Firmware Interface) architecture. UEFI has many new functions and advantages that traditional BIOS cannot achieve, and it will completely replace BIOS in the future. The MSI UEFI BIOS uses UEFI as the default boot mode to take full advantage of the new chipset' s capabilities.

Important

The term BIOS in this user guide refers to UEFI BIOS unless otherwise noted.

UEFI advantages

- Fast booting - UEFI can directly boot the operating system and save the BIOS self-test process. And also eliminates the time to switch to CSM mode during POST.
- Supports for hard drive partitions larger than 2 TB.
- Supports more than 4 primary partitions with a GUID Partition Table (GPT).
- Supports unlimited number of partitions.
- Supports full capabilities of new devices - new devices may not provide backward compatibility.
- Supports secure startup - UEFI can check the validity of the operating system to ensure that no malware tampers with the startup process.

Incompatible UEFI cases

- 32-bit Windows operating system - this motherboard supports only Windows 11 64-bit operating system.
- Older graphics card - the system will detect your graphics card. If you use older graphics cards, it may display a warning message There is no GOP (Graphics Output protocol) support detected in this graphics card.

Important

We recommend that you replace it with a graphics card supporting GOP/UEFI or use CPU with integrated graphics for having normal function.

How to check the BIOS mode?

1. Power on your computer.
2. Press **Delete** key, when the **Press DEL key to enter Setup Menu, F11 to enter Boot Menu** message appears on the screen during the boot process.
3. After entering the BIOS, you can check the **BIOS Mode** at the top of the screen.

BIOS Mode: **UEFI**

BIOS Setup

The default settings offer the optimal performance for system stability in normal conditions. You should **always keep the default settings** to avoid possible system damage or failure booting unless you are familiar with BIOS.

Important

- *BIOS items are continuously update for better system performance. Therefore, the description may be slightly different from the latest BIOS and should be for reference only. You could also refer to the HELP information panel for BIOS item description.*
- *The BIOS screens, options and settings will vary depending on your system.*

Entering BIOS Setup

Press **Delete** key, when the **Press DEL key to enter Setup Menu, F11 to enter Boot Menu** message appears on the screen during the boot process.

Function key

F1:	General Help list
F2:	Add/ Remove a favorite item
F3:	Enter Favorites menu
F4:	Enter CPU Specifications menu
F5:	Enter Memory-Z menu
F6:	Load optimized defaults
F7:	Switch between Advanced mode and EZ mode
F8:	Load Overclocking Profile
F9:	Save Overclocking Profile
F10:	Save Change and Reset*
F12:	Take a screenshot and save it to USB flash drive (FAT/ FAT32 format only).
Ctrl+F:	Enter Search page

* When you press F10, a confirmation window appears and it provides the modification information. Select between Yes or No to confirm your choice.

BIOS User Guide

If you' d like to know more instructions on setting up the BIOS, please refer to http://download.msi.com/manual/mb/Intel600BIOS.pdf or scan the QR code to access.

Important

Functions may vary depending on the product you have.

Resetting BIOS

You might need to restore the default BIOS setting to solve certain problems. There are several ways to reset BIOS:

- Go to BIOS and press **F6** to load optimized defaults.
- Short the **Clear CMOS** jumper on the motherboard.

Important

*Be sure the computer is off before clearing CMOS data. Please refer to the **Clear CMOS** jumper section for resetting BIOS.*

Updating BIOS

Updating BIOS with M-FLASH

Before updating:

Please download the latest BIOS file that matches your motherboard model from MSI website. And then save the BIOS file into the USB flash drive.

Updating BIOS:

1. Switch to the target BIOS ROM by Multi-BIOS switch. Please skip this step if your motherboard doesn' t has this switch.
2. Insert the USB flash drive that contains the update file into the USB port.
3. Please refer the following methods to enter flash mode.
   - Reboot and press **Ctrl + F5** key during POST and click on Yes to reboot the system.

     

   - Reboot and press **Del** key during POST to enter BIOS. Click the **M-FLASH** button and click on Yes to reboot the system.

     

4. Select a BIOS file to perform the BIOS update process.
5. When prompted click on **Yes** to start recovering BIOS.
6. After the flashing process is 100% completed, the system will reboot automatically.

Updating the BIOS with MSI Center

Before updating:

- Make sure the LAN driver is already installed and the internet connection is set properly.
- Please close all other application software before updating the BIOS.

To update BIOS:

1. Install and launch MSI Center and go to **Support** page.
2. Select **Live Update** and click on **Advance** button.
3. Select the BIOS file and click on **Install** button.
4. The installation reminder will appear, then click the Install button on it.
5. The system will automatically restart to update BIOS.
6. After the flashing process is 100% completed, the system will restart automatically.

Regulatory Notices

FCC-B Radio Frequency Interference Statement

This equipment has been tested and found to comply with the limits for a Class B digital device, pursuant to part 15 of the FCC rules. These limits are designed to provide reasonable protection against harmful interference in a residential installation. This equipment generates, uses and radiates radio frequency energy, and, if not installed and used in accordance with the instructions, may cause harmful interference to radio communications. However, there is no guarantee that interference will not occur in a particular installation. If this equipment does cause harmful interference to radio or television reception, which can be determined by turning the equipment off and on, the user is encouraged to try to correct the interference by one or more of the following measures:

- Reorient or relocate the receiving antenna.
- Increase the separation between the equipment and receiver.
- Connect the equipment into an outlet on a circuit different from that to which the receiver is connected.

NOTE

- The changes or modifications not expressly approved by the party responsible for compliance could void the user' s authority to operate the equipment.
- Shield interface cables and AC power cord, if any, must be used in order to comply with the emission limits.

FCC Conditions

This device complies with part 15 of the FCC Rules. Operation is subject to the following two conditions:

- This device may not cause harmful interference.
- This device must accept any interference received, including interference that may cause undesired operation.

MSI Computer Corp.

901 Canada Court, City of Industry, CA 91748, USA

(626)913-0828

www.msi.com

CE Conformity

Products bearing the CE marking comply with one or more of the following EU Directives as may be applicable:

- RED 2014/53/EU
- Low Voltage Directive 2014/35/EU
- EMC Directive 2014/30/EU
- RoHS Directive 2011/65/EU
- Implementing measure Directive 2009/125/EC of ESPR Regulation (EU) 2024/1781

Compliance with these directives is assessed using applicable European Harmonized Standards.
The point of contact for regulatory matters is MSI-Europe: Eindhoven 5706 5692 ER Son, the Netherlands.
For any support regarding the EU General Product Safety Regulation (GPSR), please contact MSI Computer Europe B.V. via gpsr@msi.com Science Park Eindhoven 5706 5692 ER Son, the Netherlands

Products with Radio Functionality (EMF)

This product incorporates a radio transmitting and receiving device. For computers in normal use, a separation distance of 20 cm ensures that radio frequency exposure levels comply with EU requirements. Products designed to be operated at closer proximities, such as tablet computers, comply with applicable EU requirements in typical operating positions. Products can be operated without maintaining a separation distance unless otherwise indicated in instructions specific to the product.

Restrictions for Products with Radio Functionality

WLAN 5150-5350 MHz:

The WiFi operating in the band 5150-5350 MHz shall be restricted to indoor use in the European Union.

WLAN 6E:

a. Low Power Indoor (LPI) Wi-Fi 5.945-6.425 GHz devices:

   The device is restricted to indoor use only when operating in the 5945 to 6425 MHz frequency range in the European Union.

b. Very Low Power (VLP) Wi-Fi 5.945-6.425 GHz devices (portable devices):

   The device is not permitted to be used on Unmanned Aircraft Systems (UAS) when operating in the 5945 to 6425 MHz frequency range in the European Union.

Wireless Radio Use

This device is restricted to indoor use when operating in the 2.4GHz, 5GHz, 6GHz frequency band.

Cet appareil doit être utilisé à l' intérieur.

당해 무선설비는 운용중 전파혼신 가능성이 있음.

この製品は、周波数帯域 2.4GHz, 5GHz, 6GHz で動作しているときは、屋内においてのみ使用可能です。

NCC無線設備警告聲明

工作頻率2.4GHz, 5GHz, 6GHz該頻段限於室內使用。

經型式認證合格之低功率射頻電機，非經許可，公司、商號或使用者均不得擅自變更頻率、加大功率或變更原設計之特性及功能。

低功率射頻電機之使用不得影響飛航安全及干擾合法通信；經發現有干擾現象時，應立即停用，並改善至無干擾時方得繼續使用。前項合法通信，指依電信法規定作業之無線電通信。低功率射頻電機須忍受合法通信或工業、科學及醫療用電波輻射性電機設備之干擾。

Compliance Statement of Innovation, Science and Economic Development Canada (ISED)

This device complies with with Innovation, Science and Economic Development Canada' s licence-exempt RSS(s). Operation is subject to the following two conditions:

(1) this device may not cause interference, and (2) this device must accept any interference, including interference that may cause undesired operation of the device.

Operation in the band 5150-5250 MHz is only for indoor use to reduce the potential for harmful interference to co-channel mobile satellite systems.

CAN ICES-003(B)/NMB-003(B)

Australia and New Zealand notice

This equipment incorporates a radio transmitting and receiving device. In normal use, a separation distance of 20 cm ensures that radio frequency exposure levels comply with the Australian and New Zealand Standards.

クラスB情報技術装置

この装置は、クラスB情報技術装置です。この装置は、家庭環境で使用することを目的としていますが、この装置がラジオやテレビジョン受信機に近接して使用されると、受信障害を引き起こすことがあります。取扱説明書に従って正しい取り扱いをして下さい。

VCCI-B

KC인증서

R-R-MSI-20-7E44

상호: (주)엠에스아이코리아
제품명: 메인보드
모델명: 20-7E44
제조년월: 2025년
제조자 및 제조국가: MSI/중국

Battery Information

European Union:



Batteries, battery packs, and accumulators should not be disposed of as unsorted household waste. Please use the public collection system to return, recycle, or treat them in compliance with the local regulations.

BSMI:



For better environmental protection, waste batteries should be collected separately for recycling or special disposal.

California, USA:



The button cell battery may contain perchlorate material and requires special handling when recycled or disposed of in California.
For further information please visit:
https://dtsc.ca.gov/perchlorate/

⚠WARNING

- **INGESTION HAZARD**: This product contains a button cell or coin battery.
- **DEATH** or serious injury can occur if ingested.
- A swallowed button cell or coin battery can cause **Internal Chemical Burns** in as little as **2 hours**.
- **KEEP** new and used batteries **OUT OF REACH OF CHILDREN**
- **Seek immediate medical attention** if a battery is suspected to be swallowed or inserted inside any part of the body.



- Remove and immediately recycle or dispose of used batteries according to local regulations and keep away from children. Do NOT dispose of batteries in household trash or incinerate.
- Even used batteries may cause severe injury or death. Call a local poison control center for treatment information.
- Battery type: CR2032
- Battery voltage: 3V
- Non-rechargeable batteries are not to be recharged.
- Do not force discharge, recharge, disassemble, heat above (manufacturer' s specified temperature rating) or incinerate. Doing so may result in injury due to venting, leakage or explosion resulting in chemical burns.
- This product contains an irreplaceable battery.
- This icon indicates that a swallowed button battery can cause serious injury or death. Please keep batteries out of sight or reach of children.

Chemical Substances Information

In compliance with chemical substances regulations, such as the EU REACH Regulation (Regulation EC No. 1907/2006 of the European Parliament and the Council), MSI provides the information of chemical substances in products at:

https://csr.msi.com/global/index

Environmental Policy

- The product has been designed to enable proper reuse of parts and recycling and should not be thrown away at its end of life.
- Users should contact the local authorized point of collection for recycling and disposing of their end-of-life products.
- Visit the MSI website <https://csr.msi.com/global/pevn_ewaste> and locate a nearby distributor for further recycling information.
- Please visit <https://us.msi.com/page/recycling> for information regarding the recycling of your product in the US.

WEEE (Waste Electrical and Electronic Equipment) Statement



European Union: This symbol on the product indicates that this product cannot be discarded as municipal waste. Instead, it is your responsibility to dispose of your waste electrical and electronic equipment by handing it over to a designated collection point for recycling. For more information about where you can drop off your waste equipment for recycling, please contact your local city office, your household waste disposal service or the shop where you purchased the product.

日本JIS C 0950材質宣言

日本工業規格JIS C 0950により、2006年7月1日以降に販売される特定分野の電気および電子機器について、製造者による含有物質の表示が義務付けられます。

https://csr.msi.com/tw/Japan-JIS-C-0950-Material-Declarations

India RoHS

This product complies with the “India E-waste (Management and Handling) Rule 2011” and prohibits use of lead, mercury, hexavalent chromium, polybrominated biphenyls or polybrominated diphenyl ethers in concentrations exceeding 0.1 weight % and 0.01 weight % for cadmium, except for the exemptions set in Schedule 2 of the Rule.

Türkiye EEE yönetmeliği

Türkiye Cumhuriyeti: EEE Yönetmeliğine Uygundur

Україна обмеження на наявність небезпечних речовин

Обладнання відповідає вимогам Технічного регламенту щодо обмеження використання деяких небезпечних речовин в електричному та електронному обладнані, затвердженого постановою Кабінету Міністрів України від 3 грудня 2008 № 1057.

Việt Nam RoHS

Kể từ ngày 01/12/2012, tất cả các sản phẩm do công ty MSI sản xuất tuân thủ Thông tư số 30/2011/TT-BCT quy định tạm thời về giới hạn hàm lượng cho phép của một số hóa chất độc hại có trong các sản phẩm điện, điện tử"

MS-7E44主板产品中有害物质的名称及含有信息表

部件名称	有害物质									
	Pb	Hg	Cd	Cr(VI)	PBBs	PBDEs	DBP	DIBP	BBP	DEHP
电路板组件*	╳	○	○	○	○	○	○	○	○	○
外部信号连接头	╳	○	○	○	○	○	○	○	○	○
线材	╳	○	○	○	○	○	○	○	○	○

注1：○：表示该有害物质在该部件所有均质材料中的含量均不超出电器电子产品有害物质限制使用国家标准要求。

╳：表示该有害物质至少在该部件的某一均质材料中的含量超出电器电子产品有害物质限制使用国家标准要求。

注2：以上未列出的部件，表明其有害物質含量均不超出电器电子产品有害物质限制使用国家标准要求。

注3：上述表格标注"╳"之部件，皆符合达标管理目录限用物质应用例外清单之限值要求。

* 电路板组件：包括印刷电路板及其构成的零部件。

限用物質含有情況標示聲明書

設備名稱：電腦主機板	型號(型式)：MS-7E44					
單元	限用物質及其化學符號					
	鉛 (Pb)	汞 (Hg)	鎘 (Cd)	六價鉻 (Cr^{+6})	多溴聯苯 (PBB)	多溴二苯醚 (PBDE)
電路板	○	○	○	○	○	○
電子元件	—	○	○	○	○	○
金屬機構件	—	○	○	○	○	○
塑膠機構件	○	○	○	○	○	○

備考1. "超出0.1 wt %" 及 "超出0.01 wt %" 係指限用物質之百分比含量超出百分比含量基準值。

備考2. "○" 係指該項限用物質之百分比含量未超出百分比含量基準值。

備考3. "—" 係指該項限用物質為排除項目。

Copyright and Trademarks Notice

Copyright © Micro-Star Int' l Co., Ltd. All rights reserved. The MSI logo used is a registered trademark of Micro-Star Int' l Co., Ltd. All other marks and names mentioned may be trademarks of their respective owners. No warranty as to accuracy or completeness is expressed or implied. MSI reserves the right to make changes to this document without prior notice.

The terms HDMI™, HDMI™ High-Definition Multimedia Interface, HDMI™ Trade dress and the HDMI™ Logos are trademarks or registered trademarks of HDMI™ Licensing Administrator, Inc.

Technical Support

If a problem arises with your system and no solution can be obtained from the user guide, please contact your place of purchase or local distributor. Alternatively, please try the following help resources for further guidance.

- Visit the MSI website for technical guide, BIOS updates, driver updates, and other information: https://www.msi.com/support/
- Register your product at: http://register.msi.com

Revision History

- Version 2.0, 2025/9, First release.